CITY OF Yucaipa

Stacey Phillips, Chair
Dennis Miller, Vice Chair
Tony Hicks, Commissioner
Mike McCuistion, Commissioner
Brandon Mihld, Commissioner
Timothy Mullins, Commissioner
Robert O'Brine, Commissioner

AGENDA

Planning Commission
August 20, 2025
6:30 PM
Yucaipa City Hall - City Council Chambers
34272 Yucaipa Blvd., Yucaipa, California

Public Comment Via Mail or Email
Items must be submitted no later than three (3) business hours prior to the meeting at which the commenter seeks to provide comment. Public comment may be submitted via U.S. Mail to the City Clerk at 34272 Yucaipa Blvd., Yucaipa, CA 92399 or via email to publiccomment@yucaipa.gov. All mail and email correspondence will be archived, distributed to the Planning Commission, and retained as part of the public record; however, submissions will not be read out loud during the meeting. The subject line should specify "Public Comment-Planning Commission" and include the date of the meeting.

Written public comment submitted on non-agenda items and on specific agenda items will be made available to the public pursuant to the City of Yucaipa policy regarding the distribution of written public comments at City Council and Commission meetings, which may be accessed on the City's website at https://yucaipa.gov/agendas-minutes/. Individuals should be aware that comments provided, including personal information, may be disclosable pursuant to the California Public Records Act.

Live stream/recording of Planning Commission meetings:
Members of the public may watch city council meetings live at: https://yucaipa.gov/live.

Possible Live Stream Disruptions:
While the City of Yucaipa strives for uninterrupted streaming, technical issues may occasionally occur. We ask for your understanding and patience should there be any disruptions during the live broadcast. We will work diligently to resolve any issues promptly, however, please be advised that the City Council meeting may continue in person while such issues are resolved. Every attempt will be made for the meeting to be recorded and made available for viewing after its conclusion.

CALL TO ORDER

PLEDGE OF ALLEGIANCE

ROLL CALL

PUBLIC COMMENT **LIMIT 3 MINUTES**

CONSENT AGENDA

The following Consent Agenda items are expected to be routine and non-controversial. The Planning Commission will act upon them, at one time, without discussion. Any Commissioner or staff member may request removal of an item from the Consent Agenda for discussion.

1. **SUBJECT**: APPROVE THE PLANNING COMMISSION MINUTES OF JULY 16, 2025.

RECOMMENDATION: That the Planning Commission approve the minutes of July 16, 2025.

PUBLIC HEARINGS

The order of Business for the Public Hearing Shall Be:

A. Open Public Hearing
B. Disclosure of Ex Parte Communications
C. Staff Presentation
D. Applicant/Representative Presentation (if necessary)
E. Public Comments
F. Applicant Rebuttal (if necessary)
G. Public Hearing Closed
H. Commission Discussion

2. **SUBJECT**: **MIGLENA MINKOYA ON BEHALF OF GREEN TEAM WORLD** CASE NO. PLN-PHE-25-0002: A SPECIAL USE PERMIT FOR THE PLACEMENT OF THREE (3) 4'X4' USED CLOTHING COLLECTION BOXES BY THE GREEN TEAM WORLDWIDE ENVIRONMENTAL GROUP WITHIN ONE (1) PARKING SPOT ON A COMMERCIAL PROPERTY AT 33644 YUCAIPA BOULEVARD; APN: 0303-101-21.

CASE NO. PLN-PHE-25-0004: A SPECIAL USE PERMIT FOR THE PLACEMENT OF THREE (3) 4'X 4' USED CLOTHING COLLECTION BOXES BY THE GREEN TEAM WORLDWIDE ENVIRONMENTAL GROUP WITHIN ONE (1) PARKING SPOT ON A COMMERCIAL PROPERTY AT 31515 YUCAIPA BOULEVARD; APN: 0300-191-44.

RECOMMENDATION:

That the Planning Commission conduct a public hearing, and:

A) Review the Special Use Permits affiliated with Case Nos. PLN-PHE-25-0002 and PLN-PHE-25-0004, and if it is acceptable, approve the designs subject to the Conditions of Approval; and

B) Adopt a Categorical Exemption pursuant to the California Environmental Quality Act of 1970 and the CEQA Guidelines, as amended, Section 15303 (Class 3); and

C) Direct staff to file a Notice of Exemption.

If the proposals are not deemed acceptable, the Planning Commission can deny the Special Use Permits affiliated with Case Nos. PLN-PHE-25-0002 and PLN-PHE-25-0004 and find that the Projects are exempt from environmental review pursuant to Section 15270 of the CEQA Guidelines.

3. **SUBJECT**: **MIKE McCUTCHEON** (PLN-PHE-25-0008): A SPECIAL USE PERMIT FOR THE ARCHITECTURAL REVIEW OF AN 800 (16'x50') SQUARE FOOT, 17-FOOT-TALL STEEL CARPORT PROPOSED TO BE CONSTRUCTED IN THE REAR OF THE PROPERTY LOCATED AT 37533 OAK MESA DRIVE; APN: 0322-841-18.

RECOMMENDATION:

That the Planning Commission conduct a public hearing, and:

A) Review the architectural design of the proposed accessory structure, and if it is acceptable, approve the design subject to the Conditions of Approval; and

B) Adopt the Special Use Permit Findings as contained in the Agenda Report; and

C) Adopt a Categorical Exemption pursuant to the California Environmental Quality Act of 1970 and the CEQA Guidelines, as amended, Section 15303 (Class 3); and

D) Direct staff to file a Notice of Exemption.

ANNOUNCEMENTS

ADJOURNMENT

CEQA STATEMENT
Unless stated otherwise on the agenda, every item on the agenda is exempt from CEQA guidelines sections 15060(c), 15061(b)(3), 15273, 15378, 15301, 15323 and/or Public Resource Code Section 21065.

Pursuant to Government Code Section 54957.5, any disclosable public records related to an open session item on a regular meeting agenda and distributed by the City of Yucaipa to all or a majority of the City Council, less than 72 hours prior to that meeting, are available for public inspection at Yucaipa City Hall, 34272 Yucaipa Boulevard, Yucaipa, CA 92399, during normal business hours.

NOTICE REGARDING CHALLENGES TO DECISIONS
Pursuant to all applicable laws and regulations, including without limitation, California Government Code Section 65009 and/or California Public Resources Code Section 21177, if you wish to challenge in court any of the below decisions (regarding planning, zoning and/or environmental decisions), you may be limited to raising only those issues you or someone else raised at the public hearing(s) described in this notice/agenda, or in written correspondence delivered to the city at, or prior to, this public hearing.

NOTICE REGARDING APPEALS
Appeals of a final action by the Planning Commission must be filed with the city clerk no later than ten (10) calendar days after the day on which the final action was taken, along with the appropriate fee.

Notice Regarding Americans with Disability Act

The City of Yucaipa complies with the Americans with Disabilities Act of 1990. If you need special assistance to participate in this meeting, please call the City Clerk's Department at (909) 797-2489, during normal business hours, at least 48-hours prior to the meeting. Notification 48 hours prior to the meeting will enable the city to make reasonable accommodations to ensure accessibility to this meeting.

AFFIDAVIT OF POSTING

State of California }
County of San Bernardino } ss.
City of Yucaipa }

I, Ana V. Sauseda, City Clerk of the City of Yucaipa, California, do hereby declare that the foregoing agenda was posted on 8/14/2025, at least seventy-two (72) hours prior to the meeting per Government Code 54954.2, at the following locations:

Yucaipa City Hall, 34272 Yucaipa Boulevard, Yucaipa, California
City of Yucaipa website www.yucaipa.gov

AVS
Ana V. Sauseda, MMC
City Clerk

POSTED
8/14/2025

Remove by: 8/21/2025

Agenda Item No. 1

City of Yucaipa
PLANNING COMMISSION MINUTES
Regular Meeting of July 16, 2025

A Regular meeting of the Planning Commission of the City of Yucaipa, California was called to order in the Council Chambers, 34272 Yucaipa Boulevard, Yucaipa, on July 16, 2025, at 6:30 PM.

PRESENT: Stacey Phillips, Chair
Dennis Miller, Vice Chair
Tony Hicks, Commissioner
Mike McCuistion, Commissioner
Brandon Mihld, Commissioner
Robert O'Brine, Commissioner

ABSENT: Timothy Mullins, Commissioner

CITY STAFF: Benjamin Matlock, Deputy Director of Community Development/City Planner
Tuan Vu, Assistant City Attorney
Katrina Kunkel, Associate Engineer
Christian Farmer, Associate Planner
Maria Koolhoven, Planning Commission Assistant

CALL TO ORDER

The meeting was called to order at 6:30 p.m.

PLEDGE OF ALLEGIANCE

The Pledge of Allegiance was led by Commissioner Hicks.

ROLL CALL

PUBLIC COMMENT:

No public comments on items not on the agenda.

CONSENT AGENDA

The following Consent Agenda items are expected to be routine and non-controversial. The Planning Commission will act upon them, at one time, without discussion. Any Commissioner or staff member may request removal of an item from the Consent Agenda for discussion.

1. **SUBJECT**: APPROVE THE PLANNING COMMISSION MINUTES OF JUNE 18, 2025.

   RECOMMENDATION: That the Planning Commission approve the minutes of June 18, 2025.

   ACTION: MOTION BY VICE CHAIR MILLER, SECOND BY COMMISSIONER HICKS CARRIED, 5-0-1-1, TO APPROVE CONSENT AGENDA ITEM NO. 1. (COMMISSIONER MULLINS ABSENT, CHAIR PHILLIPS ABSTAINED)

2. **SUBJECT**: **BROESKE ARCHITECTS ON BEHALF OF PATTERSON RIVERSIDE APARTMENTS LLC** (PLN-ARC-25-0001): THE ARCHITECTURAL REVIEW FOR AN UPDATED DESIGN OF A PREVIOUSLY APPROVED APARTMENT PROJECT (CASE 21-191). THE REVISED PROPOSAL MODIFIES THE ORIGINAL LAYOUT, WHICH FEATURED A SINGLE LARGE BUILDING, TO INCLUDE FIVE (5) SEPARATE RESIDENTIAL BUILDINGS AND A CLUBHOUSE. ADDITIONALLY, THE UPDATED DESIGN INCREASES THE TOTAL NUMBER OF RESIDENTIAL UNITS BY FIVE (5).

   RECOMMENDATION:

   That the Planning Commission review the proposed colors, materials, and architectural design for the revision of a previously approved apartment complex and, if acceptable, approve Case No. ARC-25-0001.

   ACTION: MOTION BY VICE CHAIR MILLER, SECOND BY COMMISSIONER MIHLD CARRIED, 6-0-1, TO APPROVE CONSENT AGENDA ITEM NO. 2. (COMMISSIONER MULLINS ABSENT)

PUBLIC HEARINGS

The order of Business for the Public Hearing Shall Be:

A. Open Public Hearing
B. Disclosure of Ex Parte Communications
C. Staff Presentation
D. Applicant/Representative Presentation (if necessary)
E. Public Comments
F. Applicant Rebuttal (if necessary)
G. Public Hearing Closed
H. Commission Discussion

OLD BUSINESS:

3. **SUBJECT:** CASE NO. PLN-PDE-25-0002: CONSIDERATION OF ORDINANCE NO. 450, WHICH ADDS OR MODIFIES 24 DIFFERENT ELEMENTS OF THE DEVELOPMENT CODE TO PROVIDE A PERIODIC CLEANUP AND ENHANCEMENT, INCLUDING UPDATES TO STATE LAW, IMPLEMENTING PROGRAMS OF THE HOUSING ELEMENT, IMPLEMENTING PRELIMINARY ECONOMIC DEVELOPMENT AND FISCAL REVENUE EFFORTS, ENHANCING PUBLIC SAFETY ELEMENTS, AND REFLECTING LONGSTANDING INTERNAL PROCEDURES AND PROCESSES. (CONTINUED FROM JUNE 18, 2025)

RECOMMENDATION:

That the Planning Commission conduct a public hearing and provide a recommendation to the City Council to:

1. Approve the introduction and first reading of Ordinance No. 450, an Ordinance of the City of Yucaipa, California, adding Development Code Section 812.19096, Section 812.030143, Chapter 18 (Alcohol Establishments), Chapter 19 (Massage Therapy Establishments) and Chapter 13 (Landscape Regulations), and amending Development Code Sections 83.030105, 83.030323, 83.030305, 83.030505, 83.040110, 84.0335, 84.0330, 87.0630, 87.0701, 87.0705, 87.0710, 87.0725, 84.0905, 83.010305, 83.041120 and 83.030225, and Chapter 2 (Multiple Residential Design Standards) of Division 8 (Specific Use Design Standards), Chapter 4 (Height Regulations) of Division 7 (General Design Standards), and Article 1 (Fire Safety (FR) Overlay District) of Chapter 2 (Hazard Protection) of Division 5 (Overlay Districts) as part of a periodic code requirement cleanup and enhancement; and

2. Adopt an Addendum to the 2016 Yucaipa General Plan Environmental Impact Report in accordance with the requirements of the California Environmental Quality Act of 1970 and the CEQA Guidelines, as amended; and

3. Direct staff to file a Notice of Determination subsequent to certification of the Addendum to the 2016 General Plan Environmental Impact Report.

As part of the motion, the Planning Commission can recommend all, or parts of the Ordinance as appropriate.

DISCUSSION:

Deputy Director of Community Development / City Planner Benjamin Matlock presented the Agenda Report. Commissioners asked questions regarding city signage and the zoning clearance process.

PUBLIC COMMENT: No comments received.

The Public Hearing was then closed.

ACTION: MOTION BY COMMISSIONER McCUISTION, SECOND BY VICE CHAIR MILLER, CARRIED, 5-1-1, (COMMISSIONER HICKS VOTED NO, COMMISSIONER MULLINS ABSENT) TO RECOMMEND APPROVAL OR CONSIDERATION TO ALL OF THE ITEMS WITH THE EXCEPTION OF SECTIONS 15-18 SO THAT CITY COUNCIL CAN REVIEW AND PROVIDE ADDITIONAL DIRECTION ON THOSE ITEMS.

NEW BUSINESS:

4. **SUBJECT**: **FAR WEST INDUSTRIES** (PLN-PHE-25-0001): A TENTATIVE TRACT MAP (TTM 20786) ON A 9.18 PROPERTY AT THE NORTHWEST INTERSECTION OF 6TH STREET AND AVENUE G FOR A 28-LOT SINGLE-FAMILY RESIDENTIAL DEVELOPMENT IN THE RS-10M (SINGLE-RESIDENTIAL 10,000 SQUARE FOOT MINIMUM LOT SIZE) LAND USE DISTRICT WHICH WILL INCLUDE A LETTERED LOT FOR DRAINAGE MANAGEMENT AND A PERIMETER FENCE THAT IS 6 FEET IN HEIGHT. THIS SUBMITTAL ALSO INCLUDES ARCHITECTURAL REVIEW FOR THE PROPOSED ONE- AND TWO-STORY HOMES

RECOMMENDATION:

That the Planning Commission conduct a public hearing; and:

1. Approve Tentative Tract Map No. 20786 (Case No. PLN-PHE-25-0001) subject to the Conditions of Approval as contained in the Agenda Report; and

2. Adopt the Subdivision Findings as contained in the Agenda Report; and

3. Review, and if it is considered acceptable, approve the architectural design and conceptual landscaping for the proposed Project.

4. Determine that the Project does not require any additional environmental review pursuant Section 15162(a) of the California Environmental Quality Act of 1970 and the CEQA Guidelines, as amended; and

5. Direct staff to file a Notice of Determination.

DISCUSSION:

Associate Planner Christian Farmer presented the Agenda Report.

The applicant's Project Manager, Brian Berkson, was in attendance and thanked the Commission and Associate Planner Christian Farmer for the presentation. Mr. Berkson informed the Commission that Far West Industries has built in Yucaipa before and is looking forward to working in the city again.

Commissioner Hicks stated that he really appreciates the project and is one of the best single family home projects the Commission has seen in a long time.

PUBLIC COMMENT:

The following members of the public spoke:

- Jo Sutt

The Public Hearing was then closed.

Commissioner McCuistion expressed parking concerns. Associate Engineer Katrina Kunkel responded to the Commissioner's concerns.

Commissioner O'Brine stated that the project would be a great addition to Yucaipa.

Chair Phillips stated that the development would be great for Yucaipa and generate almost nine hundred thousand dollars in Development Impact Fees.

> **ACTION: MOTION BY Vice Chair Miller, SECOND BY Commissioner Hicks, CARRIED, 6-0-1 (Commissioner Mullins Absent), TO APPROVE AGENDA ITEM NO. 4. WITH AN EMPHASIS TO AMEND CONDITION OF APPROVAL # 77 TO STATE VARIABLE SETBACK OF 22 FEET AND AVERAGE OF 25 FEET, AND TO REMOVE CONDITION OF APPROVAL #84 REGARDING AN HOA.**

ANNOUNCEMENTS: Deputy Director of Community Development /City Planner Benjamin Matlock informed the Commission that Associate Planner Christian Farmer will be leaving the City of Yucaipa and will miss him and that he has been a great employee for the last four years.

ADJOURNMENT:

The meeting adjourned at 8:23 PM.

Benjamin Matlock Deputy Director/City Planner	Stacey Phillips Chair of the Planning Commission

Item No. 2

AGENDA REPORT

DATE: Planning Commission Meeting of August 20, 2025

TO: Honorable Chairperson and Planning Commissioners

FROM: Katie Syme, Development Services Technician

SUBJECT: **Miglena Minkova on behalf of Green Team Worldwide** (Special Use Permit)
Case No. PLN-PHE-25-0002: A Special Use Permit for the placement of three (3) 4'x4' used clothing collection boxes by the Green Team Worldwide Environmental Group within one (1) parking spot on a commercial property at 33644 Yucaipa Boulevard; APN: 0303-101-21.

Case No. PLN-PHE-25-0004: A Special Use Permit for the placement of three (3) 4'x 4' used clothing collection boxes by the Green Team Worldwide Environmental Group within one (1) parking spot on a commercial property at 31515 Yucaipa Boulevard; APN: 0300-191-44.

RECOMMENDATION:

That the Planning Commission conduct a public hearing, and:

A) Review the Special Use Permits affiliated with Case Nos. PLN-PHE-25-0002 and PLN-PHE-25-0004, and if it is acceptable, approve the designs subject to the Conditions of Approval; and

B) Adopt a Categorical Exemption pursuant to the California Environmental Quality Act of 1970 and the CEQA Guidelines, as amended, Section 15303 (Class 3); and

C) Direct staff to file a Notice of Exemption.

If the proposals are not deemed acceptable, the Planning Commission can deny the Special Use Permits affiliated with Case Nos. PLN-PHE-25-0002 and PLN-PHE-25-0004 and find that the Projects are exempt from environmental review pursuant to Section 15270 of the CEQA Guidelines.

BACKGROUND:

Area Land Use Designations; Improvement Levels; and Existing Land Uses:

33644 Yucaipa Boulevard:

Site:	Chapman Heights Planned Development (PD), CC (Community Commercial)	IL-1	Yucaipa Valley Shopping Center, Von's Supermarket
North:	PD- GC (Golf Course)	IL-1	Yucaipa Valley Golf Club
South:	CG (General Commercial)	IL-1	Various Commercial
East:	PD- CC	IL-1	Yucaipa Valley Shopping Center, Various Commercial
West:	PD- CC	IL-1	Yucaipa Valley Shopping Center, Various Commercial

31515 Yucaipa Boulevard:

Site:	Yucaipa Pointe Planned Development (PD), Service Commercial (CS)	IL-1	Yucaipa Pointe Shopping Center, Various Commercial
North:	CS	IL-1	Various Commercial
South:	PD, CS	IL-1	Yucaipa Pointe Shopping Center, Trader Joe's Grocery Store
East:	PD, CS	IL-1	Yucaipa Pointe Shopping Center, Various Commercial
West:	PD, CS	IL-1	Yucaipa Pointe Shopping Center, Various Commercial

DISCUSSION:

Special Use Permits:

The applicant, Green Team Worldwide Environmental Group, operated three (3) 4'x 4' used clothing collection boxes at 31515 Yucaipa Boulevard without an approved Land Use Approval and was therefore cited by the City's Code Enforcement Department on January 27, 2025. Since the Code Enforcement case was initiated, the applicant has been working to achieve compliance with the City's land use requirements. After removing the unpermitted structures from their original location at Yucaipa Pointe Shopping Center, the applicant submitted a Special Use Permit (SUP) application for another location at the Yucaipa Valley Shopping Center on February 6, 2025. They submitted a second SUP application for the original, unpermitted location at Yucaipa Pointe Shopping Center on March 20, 2025. The SUP applications are for the placement of three (3) 4'x4' used clothing collection boxes by the Green Team Worldwide Environmental Group that will occupy one (1) parking spot at each of the proposed locations. Another textile recycling bin was observed by Staff behind the "Dollar Tree" building at 33441 Yucaipa Boulevard on May 19, 2025; however, the structures at that location were removed by the end of day.

Both proposed sites are currently improved with shopping centers. Pursuant to Development Code Section 84.0625(a) the proposed facility is to be reviewed with the Special Use Permit, as a small collection facility (a facility under 500 square feet) within Commercial (CC, CS) Land Use Districts.

Each textile collection facility comprises of three (3) collection bins of 4'x4'x7' that display signage with the facility operator contact information and the type of recyclable(s) that will be deposited per 84.0625(b) requirements. The applicant notes that the structures shall be covered with durable, waterproof, and rustproof paint and has worked with staff on appropriate placement on site to minimize conflict with the existing site operations. This included placing the structure to the southern portion of 33644 Yucaipa Boulevard (Yucaipa Valley) and 31515 Yucaipa Boulevard (Yucaipa Pointe) to minimize the view from the right-of-way. Specifically, both proposed locations are designed to minimize their street visibility by either positioning the structures below the street grade elevation (Yucaipa Valley) or by locating them more than 220 feet from the public right-of-way (Yucaipa Pointe). The proposed location of the structure meets all setback requirements for structures in the Land Use District according to the attached project plans, including the site plan, floor plan, elevations, and site photos.

ELEVATION OF PROPOSED STRUCTURE:

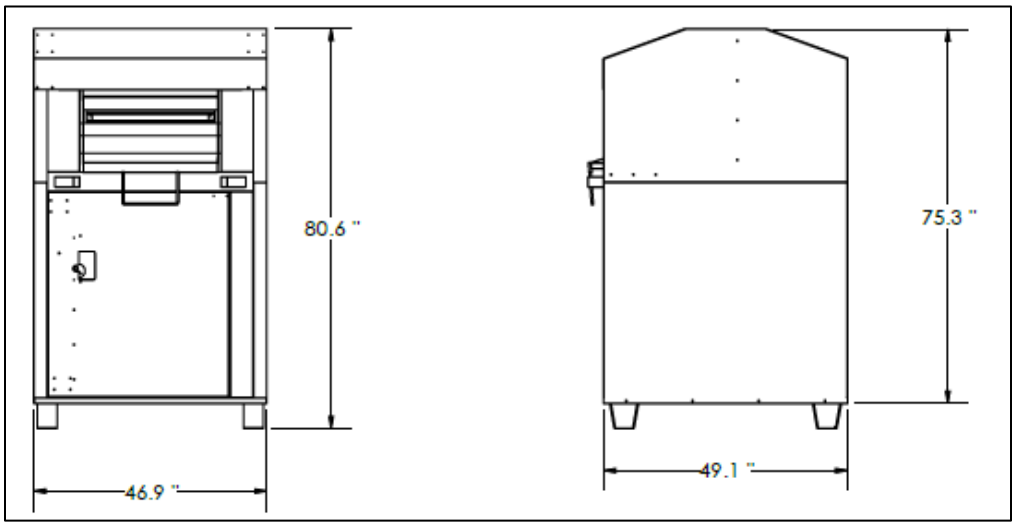

PHOTO OF STRUCTURES PROVIDED BY YUCAIPA CODE ENFORCEMENT:

Processing and Procedural Actions:

Notices of the Project were sent to the City's Development Services Divisions and Code Enforcement Department, as well as the surrounding contiguous property owners for each location. One public comment was received:

One resident expressed concerns about potential irregular maintenance causing materials to be left outside of the bin, resulting in nuisances and attracting unhoused individuals in the area.

The City's Public Safety Manager, Trevor Benson, and the Yucaipa Police Department also expressed concerns that the proposed Projects can attract crime and blight, which would be contrary to Step 4 of the City Council's adopted Homeless Strategic Plan: 'Reduction of Attractants'.

Staff is recommending that the Project, should it be approved, be determined to be Categorically Exempt from the California Environmental Quality Act (CEQA) pursuant to Section 15303 of the CEQA Guidelines (Class 3 – Small Structures).

CONCLUSION:

The Project meets the standards for access and site design. Conditions for Approval of the Special Use Permit for the small structure have been provided should the proposals be approved. The Planning Commission may add any additional conditions as necessary in their review of the proposal.

Attachment(s):

1. Location Maps
2. Site Photos
3. Conditions of Approval
4. Public Comments
5. Site Plans and Building Elevations
6. Operating Procedures

Approved by:

Benjamin Matlock, Deputy Director of Development Services/City Planner
Development Services Department

SITE LOCATION: 33644 YUCAIPA BOULEVARD (YUCAIPA VALLEY)

SITE LOCATION: 31515 YUCAIPA BOULEVARD (YUCAIPA POINTE)

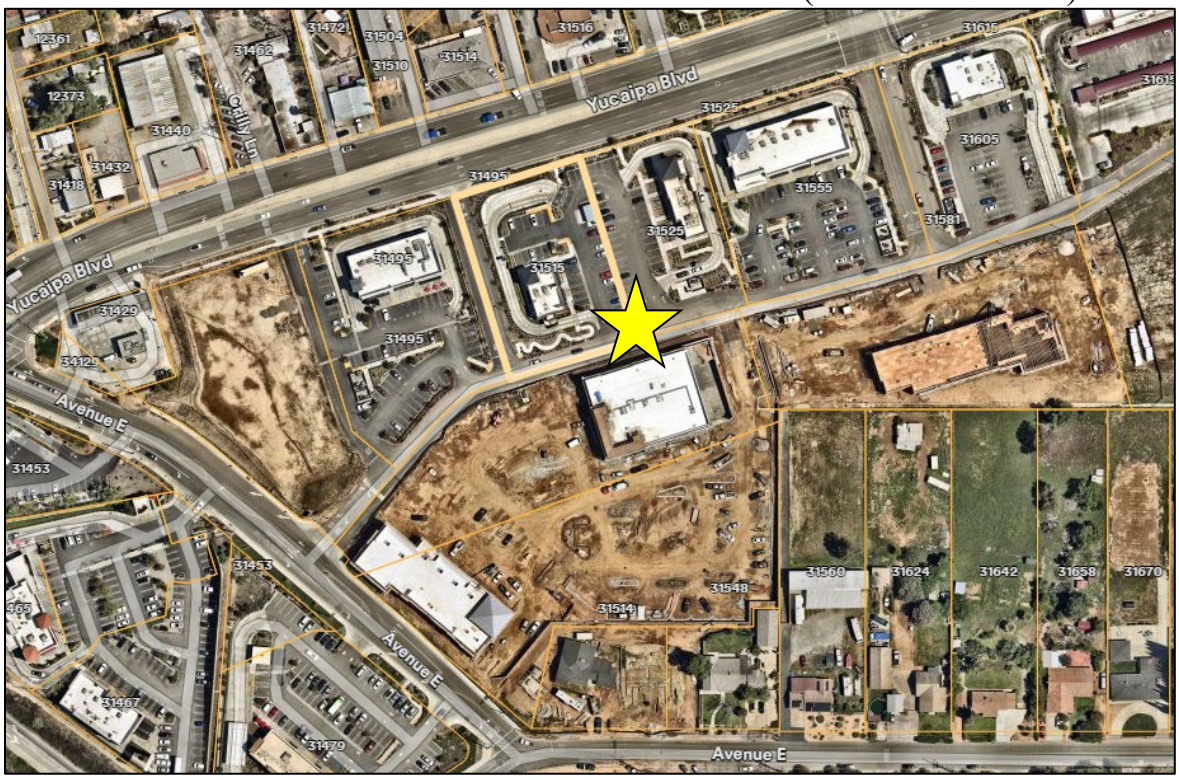

SITE PHOTO: 33644 YUCAIPA BOULEVARD (YUCAIPA VALLEY)

SITE PHOTO: 31515 YUCAIPA BOULEVARD (YUCAIPA POINTE)

Green Team Worldwide Environmental Group
Case No. PLN-PHE-25-0002
Conditions of Approval; 8-20-2025

SPECIAL USE PERMIT

CONDITION *– Note: The gold header which each Condition falls under is the timing metric for establishing when that Condition shall be satisfied.*	**DATE SATISFIED & STAFF INITIALS**
ON-GOING CONDITIONS/GENERAL REQUIREMENTS:	
PLANNING DIVISION (909) 797-2489 EXT. 252	
1. This Special Use Permit is for the placement of three (3) 4'x4' used clothing collection boxes by the Green Team Worldwide Environmental Group within one (1) parking spot on a commercial property (Chapman Heights Development Plan, CC) at 33644 Yucaipa Boulevard; APN: 0303-101-21. This approval may be permitted under the category "Small Collection Facilities" (Sections 84.0625(a) and (b)(2) of the Development Code). Any alteration or expansion of these facilities, or increase in the developed area of the site from that shown on the approved site plan, may require the submission of a new application or an additional application for Revisions for review and approval. Failure to meet any of the Conditions of Approval shall be grounds for revocation of the permit.	
2. The applicant shall defend, indemnify, and hold harmless the City, its agents, officers, and employees from any claim, action or proceeding attacking or seeking to set aside, void or annul the approval of all or part of the matters applied for, or any other claim, action or proceeding relating to or arising out of such approval. This obligation includes the obligation to reimburse the City, its agents, officers and employees for any court costs or attorney fees which the City, its agents, officers, or employees are required by a court to pay as a result of such claim, action or proceeding. The City agrees to notify the applicant of any such claim, action or proceeding promptly after the City becomes aware of it. The City may participate in the defense of the claim, action or proceeding, but such participation will not relieve the applicant of applicant's defense and indemnification obligations, including City expenses.	
3. This permit approval is for a twenty-four (24) month period. An extension of time may be granted upon written request and submittal of the appropriate fee not less than 30 days prior to the date of expiration. If the permit expires without renewal, the collection facility shall be removed from the site on the day following permit expiration. **PLEASE NOTE:** This will be the only notice given for the above specified expiration date. **The applicant is responsible for the initiation of an extension request.**	

DRAFT

4. A Categorical Exemption is being issued for this project, pursuant to the California Environmental Quality Act of 1970 and the CEQA Guidelines, as amended. The applicant/owner shall deliver a $50.00 administrative handling fee to the Planning Division within five (5) days after the effective date of conditional approval. **Payments shall be made with a Check, Money Order or Cashier's Check for $50.00 made payable to the "Clerk of the Board".** The Planning Division shall then file the Notice of Exemption with the Clerk. Proof of fee payment will be required prior to issuance of building permit.	
5. All conditions of this Special Use Permit are continuing conditions. Failure of the applicant and/or operator to comply with any or all of said conditions at any time may result in the revocation of the permit granted to use the property.	
6. The facility is permitted as an accessory use to the primary commercial use (shopping center).	
7. The container shall be covered and maintained with durable, waterproof, and rustproof material.	
8. The container shall be clearly marked to identify the type(s) of textile(s) which may be deposited. This approval only allows for the collection of clothes, shoes, bags, accessories, and bedding.	
9. The facility shall be clearly marked to identify the name and telephone number of the facility operator.	
10. The site shall be swept and maintained in a dust-free, litter-free condition on a daily basis. At no point shall recyclable materials or solid wastes be allowed to accumulate or be deposited outside the recycling facility. The site shall be monitored by the applicant on a daily basis to assure compliance with this requirement.	
11. The facility shall not impair the landscaping associated with the property's concurrent use.	
12. The facility shall be set back at least ten (10) feet from the street right-of-way and shall not obstruct pedestrian or vehicular circulation.	
13. The noise level shall not at any time exceed 70 dBA at any point.	
14. The facility shall not include power-driven sorting and/or consolidation equipment, such as crushes or bailers.	
15. Facility elevations shall be consistent with those approved by the Planning Commission, including materials, finishes, colors, and	

signage for each collection box. Graffiti and/or damage to the facility shall be addressed within 24 hours.	
16. Signage for the facility shall be approved by the Planning Division prior to the placement of any signs.	
17. Use of the facility for collection of solid wastes or hazardous wastes, as defined in Division 12, and as specified by Section 812.08022 of Title 8, is prohibited.	
18. The applicant shall abide by all agreed-to house rules and operating procedures.	
19. The applicant shall ascertain and comply with the requirements of all State, County, and local agencies as are applicable to the project.	

Green Team Worldwide Environmental Group
Case No. PLN-PHE-25-0004
Conditions of Approval; 8-20-2025

SPECIAL USE PERMIT

CONDITION *– Note: The gold header which each Condition falls under is the timing metric for establishing when that Condition shall be satisfied.*	**DATE SATISFIED & STAFF INITIALS**
ON-GOING CONDITIONS/GENERAL REQUIREMENTS:	
PLANNING DIVISION (909) 797-2489 EXT. 252	
1. This Special Use Permit is for the placement of three (3) 4'x 4' used clothing collection boxes by the Green Team Worldwide Environmental Group within one (1) parking spot on a commercial property (Yucaipa Pointe Development, CS) at 31515 Yucaipa Boulevard; APN: 0300-191-44. This approval may be permitted under the category "Small Collection Facilities" (Sections 84.0625(a) and (b)(2) of the Development Code). Any alteration or expansion of these facilities, or increase in the developed area of the site from that shown on the approved site plan, may require the submission of a new application or an additional application for Revisions for review and approval. Failure to meet any of the Conditions of Approval shall be grounds for revocation of the permit.	
2. The applicant shall defend, indemnify, and hold harmless the City, its agents, officers, and employees from any claim, action or proceeding attacking or seeking to set aside, void or annul the approval of all or part of the matters applied for, or any other claim, action or proceeding relating to or arising out of such approval. This obligation includes the obligation to reimburse the City, its agents, officers and employees for any court costs or attorney fees which the City, its agents, officers, or employees are required by a court to pay as a result of such claim, action or proceeding. The City agrees to notify the applicant of any such claim, action or proceeding promptly after the City becomes aware of it. The City may participate in the defense of the claim, action or proceeding, but such participation will not relieve the applicant of applicant's defense and indemnification obligations, including City expenses.	
3. This permit approval is for a twenty-four (24) month period. An extension of time may be granted upon written request and submittal of the appropriate fee not less than 30 days prior to the date of expiration. If the permit expires without renewal, the collection facility shall be removed from the site on the day following permit expiration. **PLEASE NOTE:** This will be the only notice given for the above specified expiration date. **The applicant is responsible for the initiation of an extension request.**	

DRAFT

4. A Categorical Exemption is being issued for this project, pursuant to the California Environmental Quality Act of 1970 and the CEQA Guidelines, as amended. The applicant/owner shall deliver a $50.00 administrative handling fee to the Planning Division within five (5) days after the effective date of conditional approval. **Payments shall be made with a Check, Money Order or Cashier's Check for $50.00 made payable to the "Clerk of the Board".** The Planning Division shall then file the Notice of Exemption with the Clerk. Proof of fee payment will be required prior to issuance of building permit.	
5. All conditions of this Special Use Permit are continuing conditions. Failure of the applicant and/or operator to comply with any or all of said conditions at any time may result in the revocation of the permit granted to use the property.	
6. The facility is permitted as an accessory use to the primary commercial use (shopping center).	
7. The container shall be covered and maintained with durable, waterproof, and rustproof material.	
8. The container shall be clearly marked to identify the type(s) of textile(s) which may be deposited. This approval only allows for the collection of clothes, shoes, bags, accessories, and bedding.	
9. The facility shall be clearly marked to identify the name and telephone number of the facility operator.	
10. The site shall be swept and maintained in a dust-free, litter-free condition on a daily basis. At no point shall recyclable materials or solid wastes be allowed to accumulate or be deposited outside the recycling facility. The site shall be monitored by the applicant on a daily basis to assure compliance with this requirement.	
11. The facility shall not impair the landscaping associated with the property's concurrent use.	
12. The facility shall be set back at least ten (10) feet from the street right-of-way and shall not obstruct pedestrian or vehicular circulation.	
13. The noise level shall not at any time exceed 70 dBA at any point.	
14. The facility shall not include power-driven sorting and/or consolidation equipment, such as crushes or bailers.	
15. Facility elevations shall be consistent with those approved by the Planning Commission, including materials, finishes, colors, and	

signage for each collection box. Graffiti and/or damage to the facility shall be addressed within 24 hours.	
16. Signage for the facility shall be approved by the Planning Division prior to the placement of any signs.	
17. Use of the facility for collection of solid wastes or hazardous wastes, as defined in Division 12, and as specified by Section 812.08022 of Title 8, is prohibited.	
18. The applicant shall abide by all agreed-to house rules and operating procedures.	
19. The applicant shall ascertain and comply with the requirements of all State, County, and local agencies as are applicable to the project.	

CITY OF Yucaipa Planning Division

34272 Yucaipa Boulevard, Yucaipa, CA 92399-9950

PROJECT NOTICE

Date: May 15, 2025

Subject: The applicant **Texgreen Inc** has submitted Case No. **PLN-PHE-25-0002** for the review of a Special Use Permit for the placement of three (3) used clothing collection boxes by the Green Team Worldwide Environmental Group within one (1) parking spot on a commercial property (Chapman Heights Development Plan, CG) at 33644 Yucaipa Boulevard; APN: 0303-101-21.

Project Location: 33644 YUCAIPA BLVD YUCAIPA, CA 92399 **APN(s):** 030310121

More Information: Visit https://yucaipa.gov/planning-project-tracker/ for more details or **SCAN the QR Code HERE!**

You are invited to comment because your property is near the proposed project. Your comments must be received by this office no later than May 29, 2025. Comments received after this date might not be considered in the decision. If you have no comment, no reply is necessary. If you have any questions regarding this proposal, please contact Katie Syme at (909) 797-2489, ext. 252. You may send your comments to the City of Yucaipa Planning Division, 34272 Yucaipa Boulevard, Yucaipa, CA 92399, or via email to ksyme@yucaipa.gov.

If you want to be notified of the project decision, print your name clearly and legibly on this form and mail it to the address above along with a self-addressed, stamped envelope. All decisions are subject to an appeal period of ten (10) calendar days after an action is taken.

COMMENTS (If you need additional space, please attach additional pages):

Will this area be maintained regularly? Or will this be pilled up outside containers on the ground making an eye sore and attracting Homeless.

SIGNATURE Karla DeBonia DATE 5/22/25 AGENCY Century 21 Lois Lauer

PRINT NAME Karla DeBonia ADDRESS [redacted]

IF YOU CHALLENGE ANY DECISION REGARDING THE ABOVE PROPOSAL IN COURT, YOU MAY BE LIMITED TO RAISING ONLY THOSE ISSUES YOU OR SOMEONE ELSE RAISED IN WRITTEN CORRESPONDENCE DELIVERED TO THE PLANNING DIVISION AT, OR PRIOR TO, THE TIME IT MAKES ITS DECISION ON THE PROPOSAL OR, IF A PUBLIC HEARING IS HELD ON THE PROPOSAL, YOU OR SOMEONE ELSE MUST HAVE RAISED THOSE ISSUES AT THE PUBLIC HEARING OR IN WRITTEN CORRESPONDENCE DELIVERED TO THE HEARING BODY AT, OR PRIOR TO, THE HEARING.

DUE TO TIME CONSTRAINTS AND THE NUMBER OF PERSONS WISHING TO GIVE ORAL TESTIMONY, TIME RESTRICTIONS MAY BE PLACED ON ORAL TESTIMONY AT ANY PUBLIC HEARING ABOUT THIS PROPOSAL. YOU MAY WISH TO MAKE YOUR COMMENTS IN WRITING TO ASSURE THAT YOU ARE ABLE TO EXPRESS YOURSELF ADEQUATELY.

cc: Surrounding Property Owners
Yucaipa Valley Water District

From: Trevor Benson
Sent: Wednesday, July 23, 2025 6:01 PM
To: Katie Syme
Subject: RE: Textile Recycling Container- Comments

Follow Up Flag: Follow up
Flag Status: Completed

Hi Katie,

It is our opinion that the proposed textile recycling and / or really any recycling centers attract crime, blight, and disease. Recycling centers go directly against our council adopted and widely successful homeless strategic plan, specifically step 4 “reduction of attractants”. Unfortunately, the sheriff’s department suffered a network disruption a while ago and that has impacted my ability to obtain impactful statistics to support our position. I am happy to come to your meeting and explain my position and / or feel free to share this email.

From: Ford, Ryan <rford@sbcsd.org>
Sent: Tuesday, July 1, 2025 4:30 PM
To: Katie Syme <ksyme@yucaipa.gov>; Benjamin Matlock <bmatlock@yucaipa.gov>
Cc: Trevor Benson <tbenson@yucaipa.gov>
Subject: RE: Textile Recycling Container- Comments

Good afternoon,

I checked with Trevor and Code Enforcement. Trevor is out of the area so unable to respond at this time. I cc'd him in this response. Apparently, these bins were already placed at several locations without obtaining permission. Each location was not maintained and were continually broken into by unhoused, leaving trash and items scattered throughout the parking lots. They recommend NOT approving the CUP. I have seen several of these bins in Redlands and Calimesa and agree they are blights.

Thank you,

Ryan Ford, Admin Sergeant
San Bernardino County Sheriff
Yucaipa Police Station
34144 Yucaipa Blvd, Yucaipa, CA 92399
Desk (909) 918-2318, Station (909) 918-2305

From: Ford, Ryan <rford@sbcsd.org>
Sent: Tuesday, July 1, 2025 3:17 PM
To: Katie Syme <ksyme@yucaipa.gov>
Subject: RE: Textile Recycling Container- Comments

Good afternoon,

I read through the packet. I do not have any concerns with their placement. Is there any way to request they display a contact number for a responsible party if there are issues with the site or bin. i.e. someone to call if they are overflowing or malfunctioning?

Thank you,

Ryan Ford, Admin Sergeant
San Bernardino County Sheriff
Yucaipa Police Station
34144 Yucaipa Blvd, Yucaipa, CA 92399
Desk (909) 918-2318, Station (909) 918-2305

Parking Summary

Parking Required (retail):	615 stalls
Parking Required (restaurant):	252 stalls
Parking Required (daycare):	15 stalls
Parking Required (office):	80 stalls
Parking Required (total):	962 stalls
Parking Provided (total):	1,190 stalls
Parking Ratio	5.2/ 1,000 s.f.
Handicap Required:	23 stalls
Handicap Provided:	35 stalls

BUILDING	USE	AREA/SEATS	FORMULA	PRK'G REQUIRED
LONGS DRUG	RETAIL AREA	17,500 S.F.	4/1000 S.F.	70 STALLS
VONS MARKET	RETAIL AREA	39,500 S.F.	4/1000 S.F.	158 STALLS
MAJOR 3	RETAIL	30,187 S.F.	4/1000 S.F.	121 STALLS
MAJOR 4	RETAIL	14,588 S.F.	4/1000 S.F.	59 STALLS
PAD A	RESTAURANT	250 SEATS	1/3 SEATS	84 STALLS
PAD B	RESTAURANT	100 SEATS	1/3 SEATS	34 STALLS
PAD C	RETAIL	6,000 S.F.	4/1000 S.F.	24 STALLS
PAD D	RETAIL	10,000 S.F.	4/1000 S.F.	40 STALLS
PAD E	RESTAURANT	150 SEATS	1/3 SEATS	50 STALLS
PAD F	OFFICE	20,000 S.F.	4/1000 S.F.	80 STALLS
PAD G	DAY CARE	7,000 S.F.	1/5 CHILDREN	15 STALLS
PAD H	RETAIL	7,500 S.F.	4/1000 S.F.	30 STALLS
SHOP 1	RETAIL	11,500 S.F.	4/1000 S.F.	46 STALLS
SHOP 2	RETAIL	7,000 S.F.	4/1000 S.F.	28 STALLS
SHOP 3	RETAIL/REST.	4,973 S.F. / 126 SEATS	4/1000 S.F. / 1/3 SEATS	62 STALLS
SHOP 4	RETAIL/REST.	4,689 S.F. / 126 SEATS	4/1000 S.F. / 1/3 SEATS	61 STALLS
TOTAL REQ'D				962 STALLS

Land Summary

Land:	24.1 acres	±1,050,374 s.f.
Building:		228,041 s.f.
Land / Building Ratio:		3.49/1
Open Space Coverage:	85% Max	53.5%
Building Coverage:	50% Max	22.3%
Landscape Coverage:	10% Min	17.3%
Pedestrian Paved Coverage:		7.6%

LEGAL DESCRIPTION

PARCEL 1 – 14 OF PM #15596, BOOK 194 OF PARCEL MAP PAGES 40/44.

APN: 030310121

Assessor Use Code: 0315
Zoning: Planned Development - PD

Drainage:No Drainage Channels or Hilly Terrain

Grading/ Topographic: No Grading Flat Land
Plant and Tree Protection: No protected trees

Project: placement of 3 clothing bins on 1 parking spot
Property Owner: YVCC II LLC
2950 Broad Street, San Luis Obispo, CA 93401
Bin Operator: Texgreen Inc
12335 McCann Dr , Santa Fe Springs, CA, 90670

UTILITY PURVEYORS

WATER	YUCAIPA VALLEY WATER DISTRICT 12770 2ND STREET YUCAIPA, CA 92399 (909) 797–5117
SEWER	YUCAIPA VALLEY WATER DISTRICT 12770 2ND STREET YUCAIPA, CA 92399 (909) 797–5117
ELECTRIC	SOUTHERN CALIFORNIA EDISON COMPANY 287 TENNESSEE BOULEVARD REDLANDS, CA 92373 (909) 793–2153
GAS	SOUTHERN CALIFORNIA GAS COMPANY P.O. BOX 3003 REDLANDS, CA 92373–0306 (909) 793–2686
TELEPHONE	VERISON PLUS 2054 W. REDLANDS BLVD., ste. E REDLANDS, CA 92373 (909) 798–1662

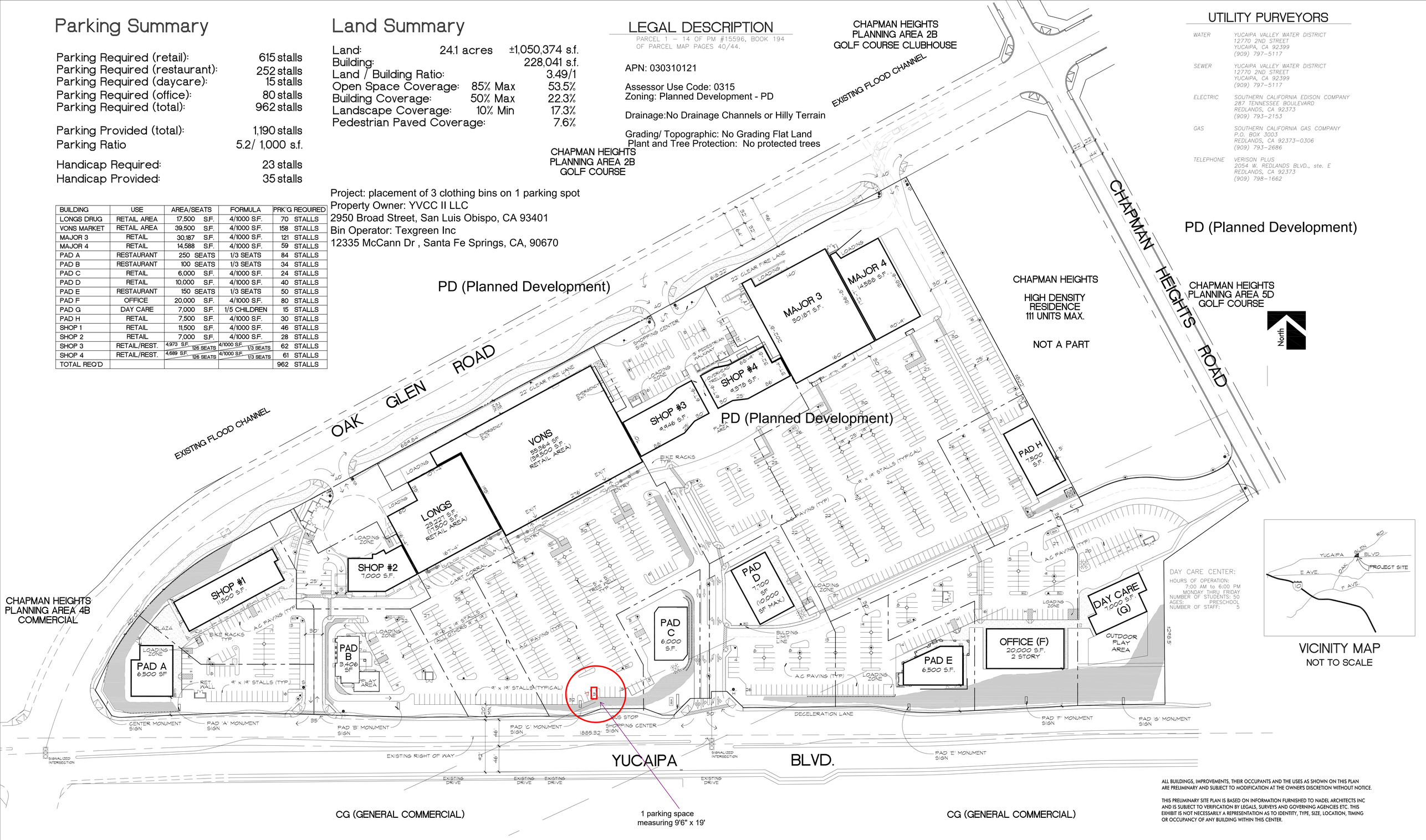

VICINITY MAP
NOT TO SCALE

ALL BUILDINGS, IMPROVEMENTS, THEIR OCCUPANTS AND THE USES AS SHOWN ON THIS PLAN ARE PRELIMINARY AND SUBJECT TO MODIFICATION AT THE OWNER'S DISCRETION WITHOUT NOTICE.

THIS PRELIMINARY SITE PLAN IS BASED ON INFORMATION FURNISHED TO NADEL ARCHITECTS INC AND IS SUBJECT TO VERIFICATION BY LEGALS, SURVEYS AND GOVERNING AGENCIES ETC. THIS EXHIBIT IS NOT NECESSARILY A REPRESENTATION AS TO IDENTITY, TYPE, SIZE, LOCATION, TIMING OR OCCUPANCY OF ANY BUILDING WITHIN THIS CENTER.

REVISIONS TO FINAL DEVELOPMENT PLAN - SITE PLAN - YUCAIPA VALLEY CENTER

YUCAIPA, CALIFORNIA

DATE: SEPTEMBER 12, 2003
NADEL JOB#: 03047.00

YUCAIPA VALLEY ACRES, LLC
C/O MDJ MANAGEMENT CO.
714.528.1185

3080 BRISTOL ST. SUITE 500
COSTA MESA, CA 92626
T:714.540.5000 F:714.755.3013
WWW.NADELARC.COM

Nadel retail Architects Inc

ALL DRAWINGS AND WRITTEN MATERIAL APPEARING HEREIN CONSTITUTE THE ORIGINAL AND UNPUBLISHED WORK OF THE ARCHITECT AND THE SAME MAY NOT BE DUPLICATED, USED OR DISCLOSED WITHOUT THE WRITTEN CONSENT OF THE ARCHITECT. COPYRIGHT: NADEL ARCHITECTS, INC. ALL RIGHTS RESERVED.

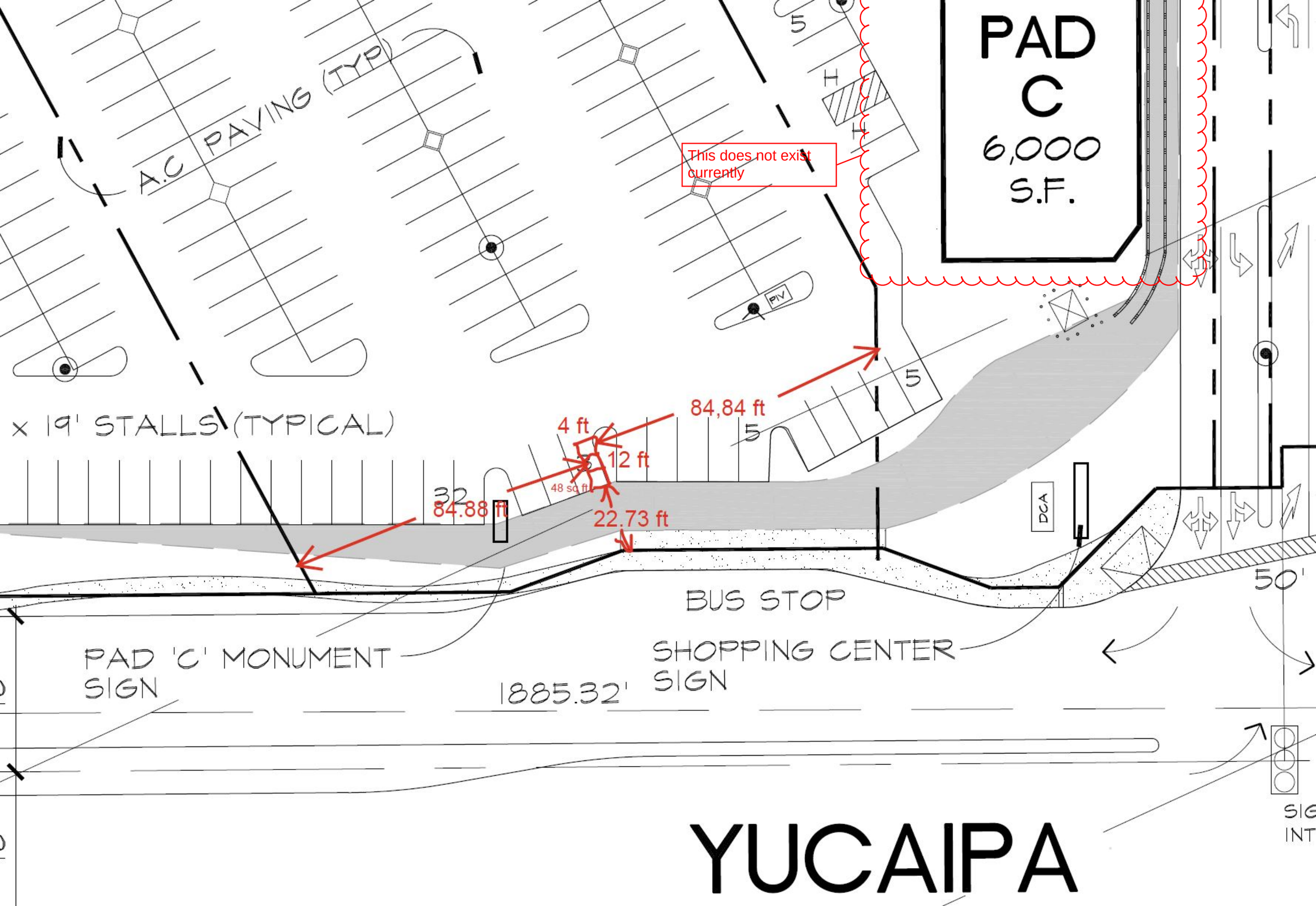
PAD
C
6,000
S.F.
A.C PAVING (TYP)
This does not exist currently
PIV
5
H
84,84 ft
4 ft
12 ft
48 sq ft
22.73 ft
84.88 ft
32
x 19' STALLS (TYPICAL)
DCA
BUS STOP
50'
PAD 'C' MONUMENT SIGN
SHOPPING CENTER SIGN
1885.32'
YUCAIPA

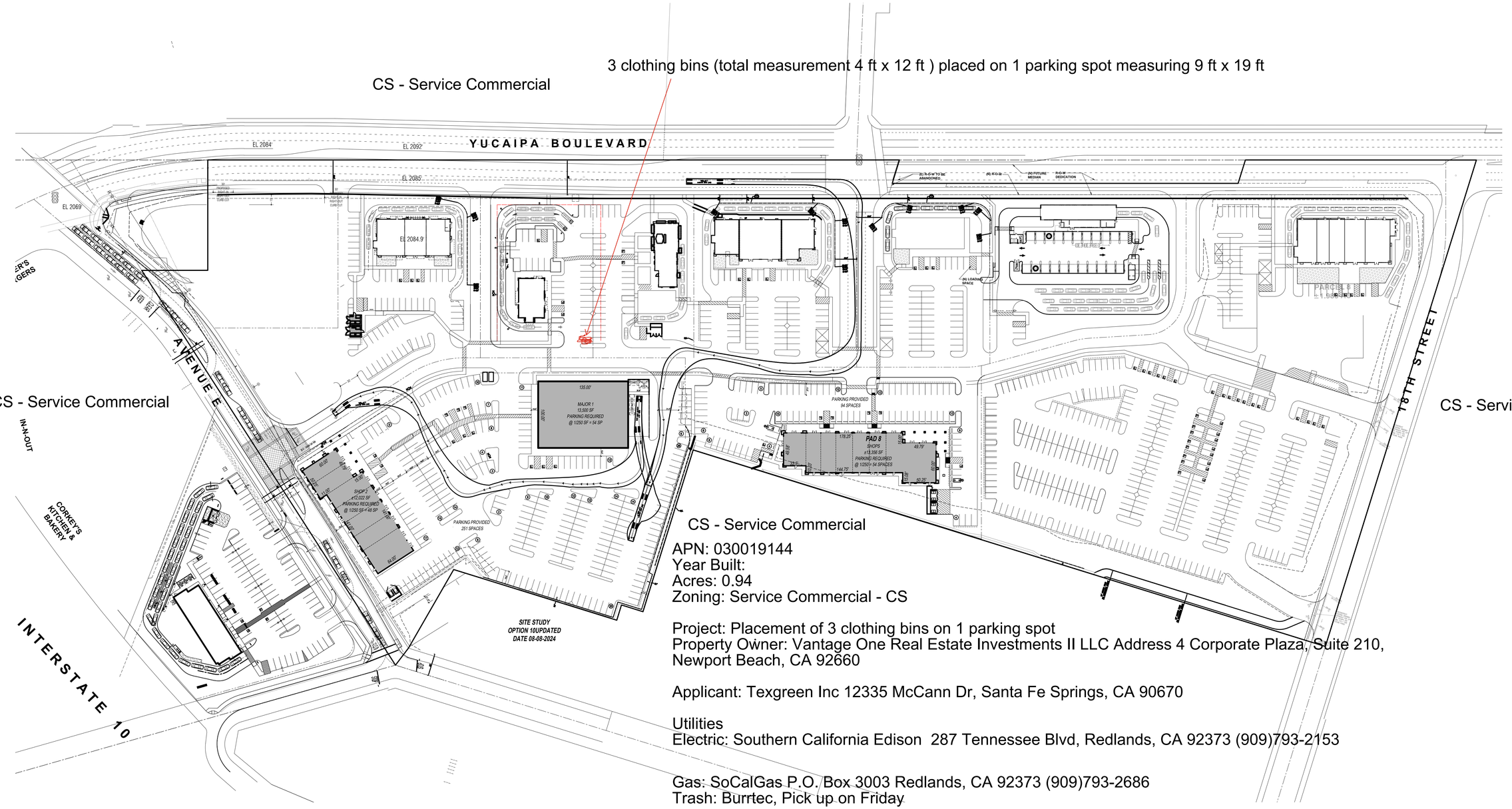

APN: 030019144
Year Built:
Acres: 0.94
Zoning: Service Commercial - CS

Project: Placement of 3 clothing bins on 1 parking spot
Property Owner: Vantage One Real Estate Investments II LLC Address 4 Corporate Plaza, Suite 210, Newport Beach, CA 92660

Applicant: Texgreen Inc 12335 McCann Dr, Santa Fe Springs, CA 90670

Utilities
Electric: Southern California Edison 287 Tennessee Blvd, Redlands, CA 92373 (909)793-2153

Gas: SoCalGas P.O. Box 3003 Redlands, CA 92373 (909)793-2686
Trash: Burrtec, Pick up on Friday

Water Provider: Western Heights Water Company 32352 Ave D, Yucaipa, CA 92399 (909) 790-1901

Sewer Provider: Yucaipa Valley Water District 12770 2nd st, Yucaipa, CA 92399 (909)797-5117

Drainage:No Drainage Channels or Hilly Terrain

Grading/ Topographic: No Grading Flat Land

Plant and Tree Protection:No Protected Trees

NORTH

SPM ARCHITECT
STEVEN PAUL MURRAY
ARCHITECT & ASSOCIATES
1177 Idaho Street, Suite 200
Redlands, CA 92374
Phone (951) 316-0575
email: spmarch007@gmail.com

STAMP:

for :

MAJOR PAD 1

31607 YUCAIPA BLVD.
YUCAIPA, CA 92399

REVISIONS
CONSTR.
BID
PLAN CHECK –
DRAWN RJC
JOB NO. 22-094d
SHEET NAME
ARCHITECTURAL SITE PLAN MAJOR PAD 1 OVERALL
SHEET NO.
A1.10A
SHEET - OF -

VERSION 10 UPDATED- 08-08-24

OVERALL ARCHITECTURAL SITE PLAN

SCALE: NTS

1

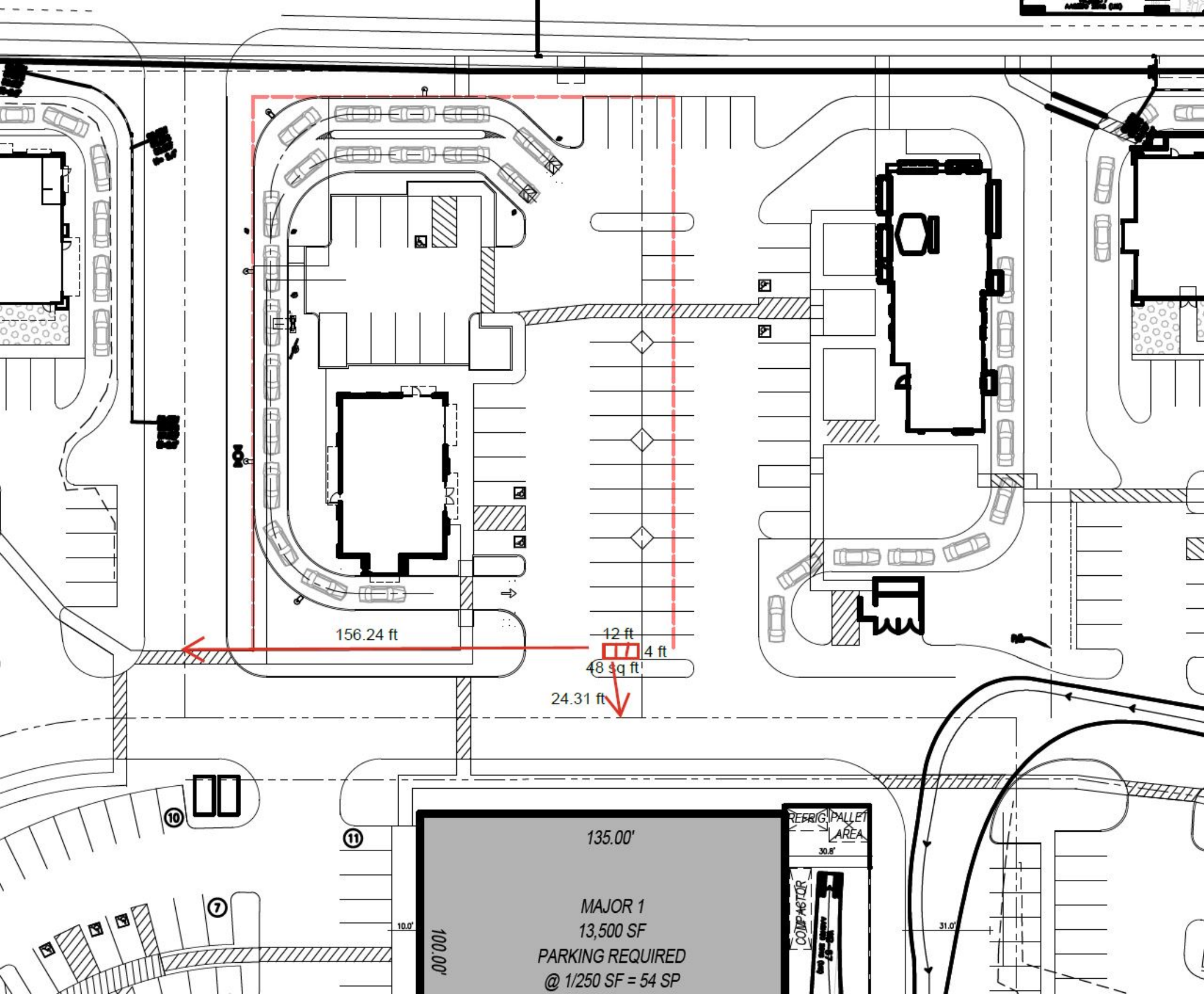
156.24 ft
12 ft
4 ft
48 sq ft
24.31 ft
135.00'
MAJOR 1
13,500 SF
PARKING REQUIRED
@ 1/250 SF = 54 SP
100.00'
10.0'
REFRIG. PALLET AREA
30.8'
COMPACTOR
31.0'
10
11
7

NOTES:

- GALVANNEALED STEEL CONSTRUCTION.
- U.V. RESISTANT POWDER COAT FINISH.
- 2 POINT LATCH.
- SPRING ASSISTED CHUTE FITS Ø13" X 27" LONG BAGS.
- EASILY REPLACEABLE DOOR WITH 7/16" STAINLESS HINGE PINS.
- HIDDEN SPRING BOLTS ENGAGE BEHIND DOOR FRAME, NOT VISIBLE FROM OUTSIDE.

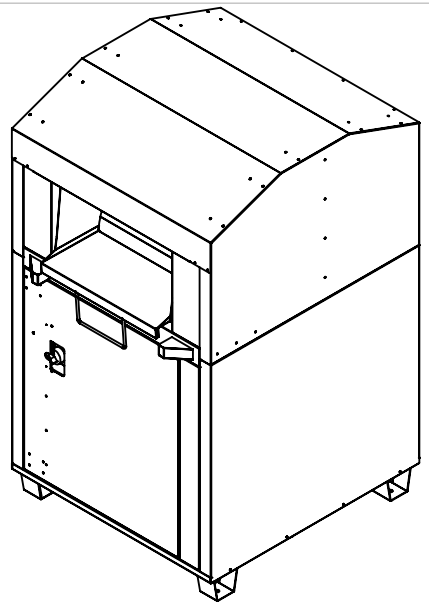

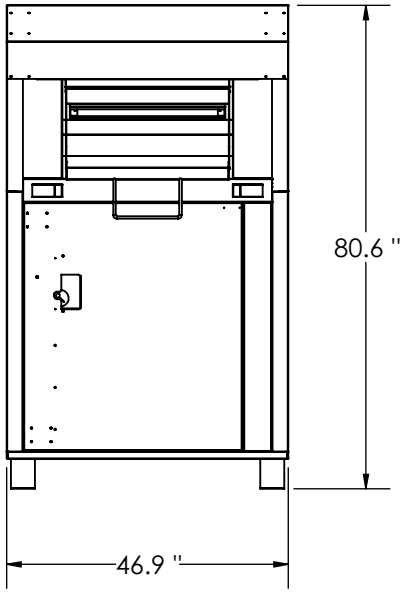

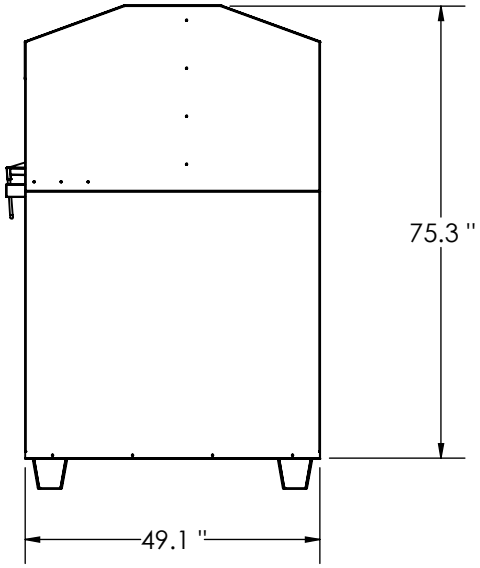

UNLESS OTHERWISE SPECIFIED:

DIMENSIONS ARE IN INCHES
TOLERANCES:
FRACTIONAL ±.015
ANGULAR: MACH ± BEND ±
TWO PLACE DECIMAL ±.020
THREE PLACE DECIMAL ±.010

	NAME	DATE
DRAWN	JCERDA	
CHECKED		
ENG APPR.	D MOORE	
MFG APPR.		
Q.A.		

COMMENTS:

PHONE: (909) 605-0538

FAX: (909) 605-7780

www.securr.com

1390 S. MILLIKEN AVE
ONTARIO CA 91761

DO NOT SCALE DRAWING

PROPRIETARY AND CONFIDENTIAL

THE INFORMATION CONTAINED IN THIS DRAWING IS THE SOLE PROPERTY OF ***securr***. ANY REPRODUCTION IN PART OR AS A WHOLE WITHOUT THE WRITTEN PERMISSION OF ***securr*** IS PROHIBITED.

THIS PRODUCT MAY BE PROTECTED BY US AND FOREIGN PATENTS AND / TRADEMARKS. SEE www.securr.com FOR DETAILS

TITLE: CB26G16

SIZE A

REV A

SCALE: 1:32 WEIGHT: SHEET 1 OF 1

5 4 3 2 1

7 ft
4 ft
4 ft
Clothes & Shoes
No Trash Please!
Clothes & Shoes
No Trespassing
Caution
Ooo, QR code!
I wonder what's behind it!
(714) 244 - 8023
We can accept the following textile items:
Clothes
Shoes
Bags
Accessories
Bedding
L.E.A.D.
LAW ENFORCEMENT AGAINST DRUGS & VIOLENCE
"On the Street and in the Classroom"
MILLION TREE CHALLENGE
REFORESTATION PARTNER
TexGreen

1pc 48 x 10 cm

1pc 98 x 40 cm

1pc 98 x 71cm

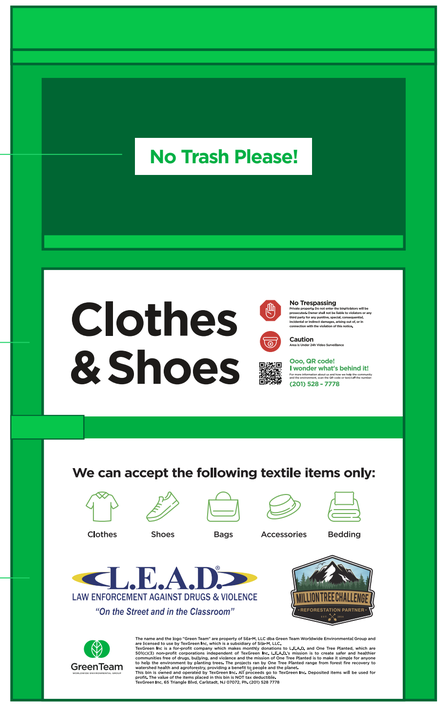

3pcs 100 x 60 cm

3pcs 100 x 20 cm

Clothes & Shoes

No Trespassing
Private property. Do not enter the bin.Violators will be prosecuted. Owner shall not be liable to violators or any third party for any punitive, special, consequential, incidental or indirect damages, arising out of, or in connection with the violation of this notice.

Caution
Area is Under 24h Video Surveillance

Ooo, QR code!
I wonder what's behind it!
For more information about us and how we help the community and the environment, scan the QR code or text/call the number:
(201) 528 - 7778

We can accept the following textile items only:

Clothes | Shoes | Bags | Accessories | Bedding

L.E.A.D.®
LAW ENFORCEMENT AGAINST DRUGS & VIOLENCE
"On the Street and in the Classroom"

MILLION TREE CHALLENGE
• REFORESTATION PARTNER •
EST. 2014

GreenTeam
WORLDWIDE ENVIRONMENTAL GROUP

The name and the logo "Green Team" are property of Sila-M, LLC dba Green Team Worldwide Environmental Group and are licensed to use by TexGreen Inc, which is a subsidiary of Sila-M, LLC.
TexGreen Inc is a for-profit company which makes monthly donations to L.E.A.D. and One Tree Planted, which are 501(c)(3) non-profit corporations independent of TexGreen Inc. L.E.A.D.'s mission is to create safer and healthier communities free of drugs, bullying, and violence and the mission of One Tree Planted is to make it simple for anyone to help the environment by planting trees. The projects ran by One Tree Planted range from forest fire recovery to watershed health and agroforestry, providing a benefit to people and the planet.
This bin is owned and operated by TexGreen Inc. All proceeds go to TexGreen Inc. Deposited items will be used for profit. The value of the items placed in this bin is NOT tax deductible.
TexGreen Inc, 65 Triangle Blvd, Carlstadt, NJ 07072, Ph. (201) 528 7778

Clothes & Shoes

Ooo, QR code!
I wonder what's behind it!
For more information about us and how we help the community and the environment, scan the QR code or text/call the number:
(201) 528 - 7778

No Trash Please!

Please do not leave any items outside of the bin

Hello Sir/Madam,

The maintenance schedule for the location is every other day.

We operate 7 days a week, so even if an extra pick up is needed – it can be arranged.

Each of our trucks is equipped with graffiti removal kit, so if we see any on the bins, they will be treated right then and there. If the graffiti does not come off, the bins is being picked up and new one will be delivered, while the first one is being re-painted.

With each visit, besides the bin, the area around the bins is also going to be maintained and cleaned, and anything picked up in radius of 25 ft of the bins.

If you have any questions, please do not hesitate to contact me.

Sincerely,

Miglena Minkova

972-420-4634

miglena@greenteamworldwide.com

Item No. 3

AGENDA REPORT

DATE: Planning Commission Meeting of August 20, 2025

TO: Honorable Chairperson and Planning Commissioners

FROM: Katie Syme, Development Services Technician

SUBJECT: **Mike McCutcheon** (Case No. PLN-PHE-25-0008): A Special Use Permit for the Architectural Review of an 800 (16'x50') square foot, 17-foot tall steel carport proposed to be constructed in the rear of the property located at 37533 Oak Mesa Drive; APN: 0322-841-18.

RECOMMENDATION:

That the Planning Commission conduct a public hearing, and:

A) Review the architectural design of the proposed accessory structure, and if it is acceptable, approve the design subject to the Conditions of Approval; and

B) Adopt the Special Use Permit Findings as contained in the Agenda Report; and

C) Adopt a Categorical Exemption pursuant to the California Environmental Quality Act of 1970 and the CEQA Guidelines, as amended, Section 15303 (Class 3); and

D) Direct staff to file a Notice of Exemption.

BACKGROUND:

Area Land Use Designations; Improvement Levels; and Existing Land Uses:

Site:	RS-20M (Single Residential; 10,000 square foot minimum), CHO (Custom Home Overlay)	IL-2	Single-family residence
North:	RS-20M	IL-2	Single-family residence
South:	RS-20M	IL-2	Single-family residence
East:	RS-20M	IL-2	Single-family residence
West:	RS-20M	IL-2	Single-family residence

DISCUSSION:

Special Use Permit for Architectural Review:

The applicant has submitted a Special Use Permit for the Architectural Review of a 17-foot tall, 800 square foot steel carport proposed to be constructed on a single residential property. Pursuant to Development Code Section 84.0645(a), any detached structure larger than 1,200 square feet, more than 20 feet in height, or of an unconventional design, such as a metal garage, would first be required to obtain a Special Use Permit for approval of the architectural design from the Planning Commission.

The metal structure is proposed to be constructed on a 0.51-acre parcel located at 37533 Oak Mesa Drive in the RS-20M (Single-Residential, 20,000 square foot minimum lot size) Land Use District with single-family residential land uses generally surrounding the site. The proposed structure is intended to provide cover for the applicant's recreational vehicle (or RV). The property is currently improved with a two-story residence that provides 4,386 square feet of living space and 1,099 square feet of non-habitable space (i.e. architectural features, garage, etc.) on-site.

The steel accessory structure will feature a gable roof and will be enclosed on all four (4) sides. The structure will have fifteen (15) feet of vertical clearance but will pitch toward the center with a peak height of about seventeen (17) feet. The exterior elevations include 'Dark Stone' painted horizontal-ribbed steel panels intended to emulate stacked stone rock features in addition to 'Cocoa Brown' trim and roofing. Similar to other SUP/ARC projects, the proposed architectural elements will best ensure compatibility with the home and other neighboring residential land uses, especially as the structure would be visible from Oak Mesa Drive and includes a door along the street-facing side.

RENDERING OF PROPOSED STRUCTURE:

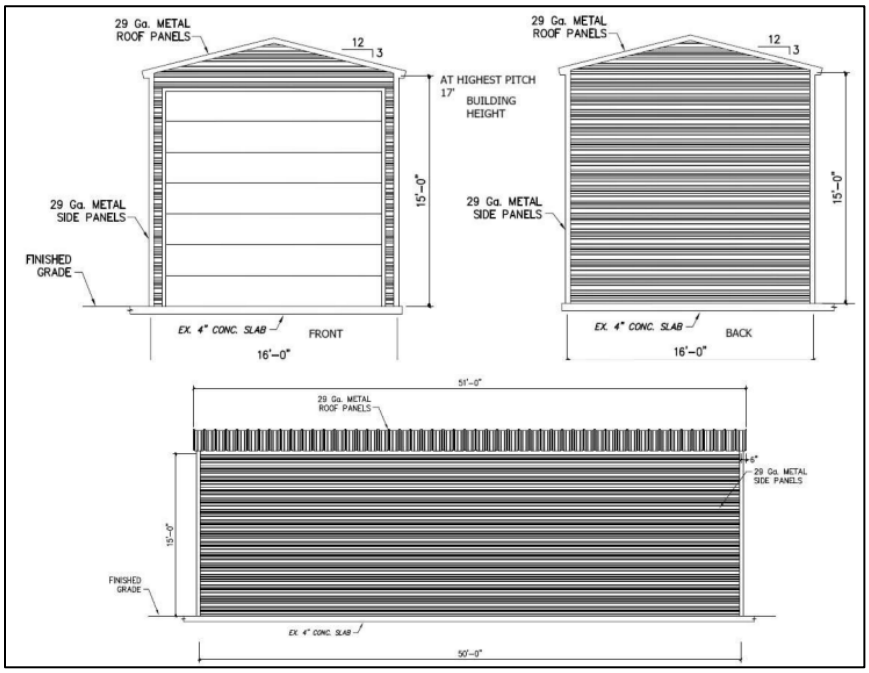

The structure is proposed to be constructed along the southern portion of the property, approximately 7 feet from the primary residence, 103 feet from the front/north property line, 10 feet from the side/west property line, 22 feet from the street side/north property line, and 10 feet from the rear/south property line. Ingress and egress will be provided by the existing driveway at the front of the property along Oak Mesa Drive. Pursuant to the Development Code, the structure shall meet all development standards associated with the Custom Home Overlay in the Single-Residential Land Use District. Furthermore, the proposed location of the structure meets all setback requirements for structures in this district according to the attached plans, elevations, and site photos.

Processing and Procedural Actions:

Notices of the Project were sent to all surrounding contiguous property owners, and no comments were received.

Staff is recommending that the Project is Categorically Exempt from the California Environmental Quality Act (CEQA), pursuant to Section 15303 of the CEQA Guidelines (Class 3 – Small Structures), as the Project consists of a small, steel structure to be used as an accessory structure.

CONCLUSION:

The Project meets the standards for access and site design. The required findings and Conditions for approval of the Special Use Permit for the accessory structure have been provided.

Attachment(s):

1. Findings for Special Use Permit
2. Land Use & Location Map
3. Site Photos
4. Conditions of Approval
5. Site Plan and Building Elevations

Approved by:

Benjamin Matlock, Deputy Director of Development Services/City Planner
Development Services Department

FINDINGS: SPECIAL USE PERMIT NO. PLN-PHE-25-0008

1. The site for the proposed use is adequate in size and shape to accommodate said use and all yards, building coverage, parking area, and other requirements of the Code, because the subject property is 0.51 acres in size and is adequate in area to accommodate the accessory structure.

2. The accessory structure will be subordinate in size to the existing single-family residence. Its location and appearance are minimized as the structure will be over 116 feet away from the street. Additionally, the color of the structure complements the property's existing residence to provide greater compatibility for the site and the other surrounding residential land uses.

3. Issuance of the permit shall not be detrimental to the public health, safety, or welfare, or injurious to the property or improvements in the vicinity and district in which the use is located, because the lawful conditions and building code requirements required for this structure to be built will ensure adequate circulation, drainage, and fire protection.

4. The appearance of the detached accessory structure and the method of construction are compatible with the surrounding built environment, because the building is compatible in size and height with surrounding houses and accessory structures, and will be required to obtain a building permit, ensuring that it has been built consistent with conceptual plans to be more compatible with the existing single-family residence on-site.

LAND USE: SINGLE-RESIDENTIAL (RS-20M)

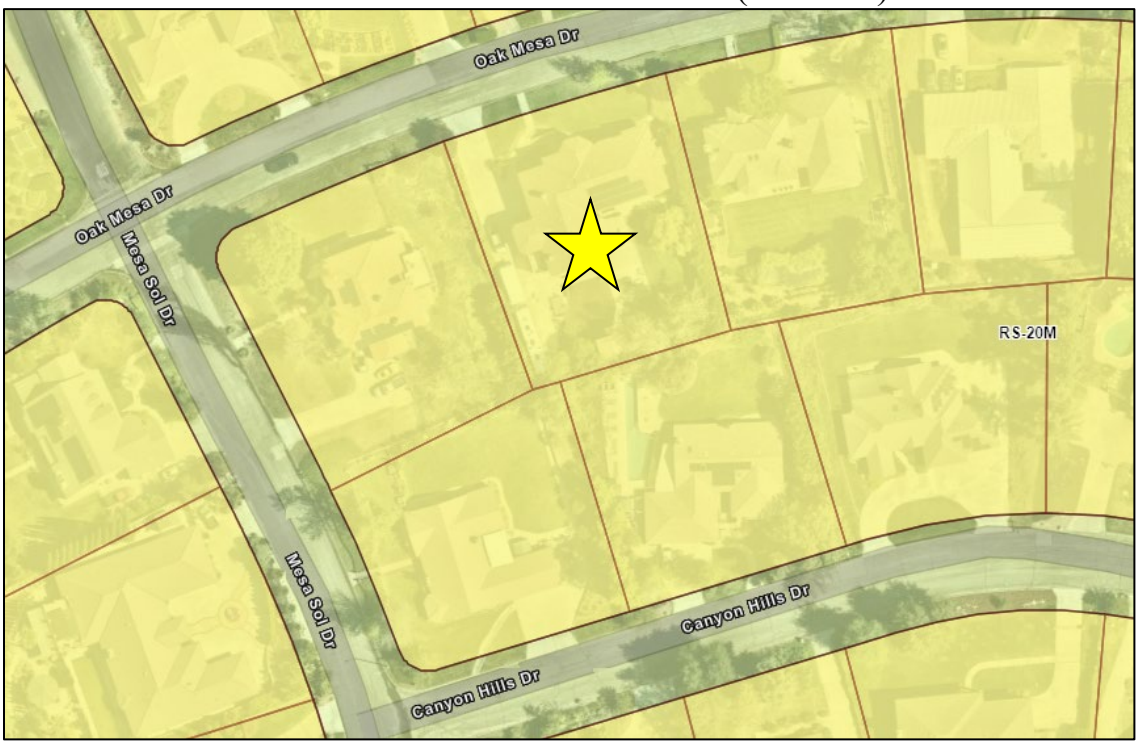

SITE LOCATION:

SITE PHOTOS:

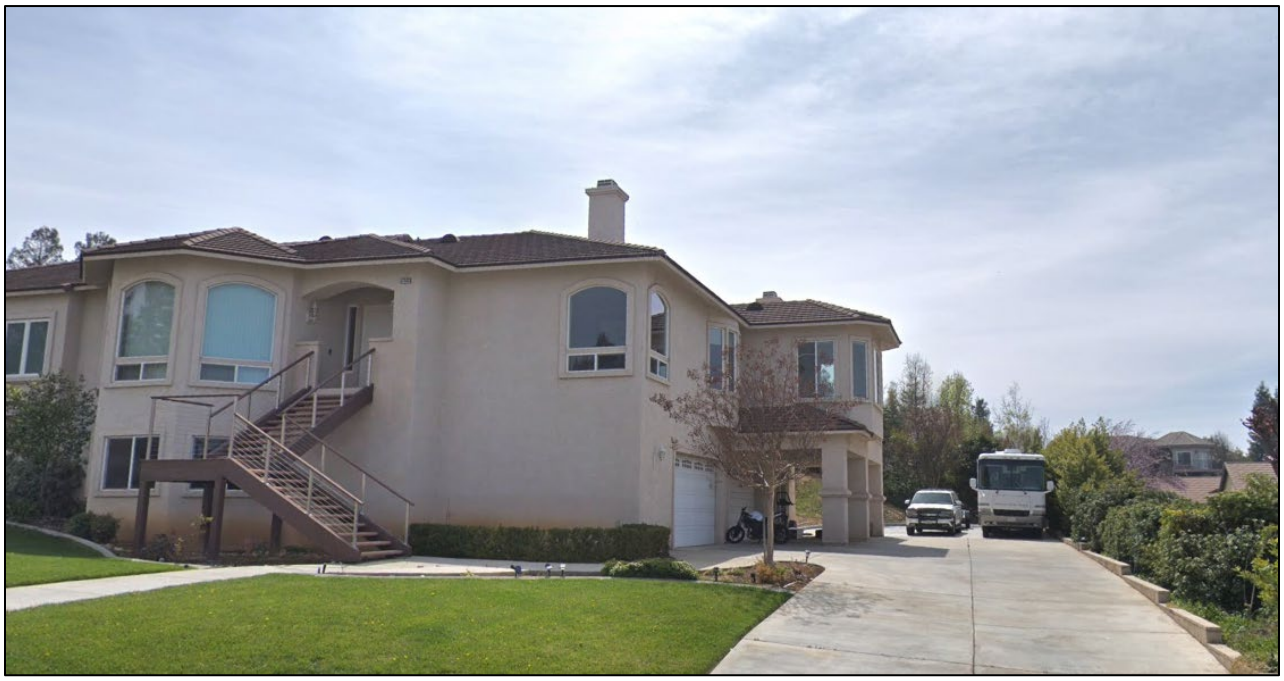

Applicant Name: Mike McCutcheon
Case No. PLN-PHE-25-0008
Conditions of Approval; 8-20-2025

SPECIAL USE PERMIT

CONDITION *– Note: The gold header which each Condition falls under is the timing metric for establishing when that Condition shall be satisfied.*	**DATE SATISFIED & STAFF INITIALS**
ON-GOING CONDITIONS/GENERAL REQUIREMENTS:	
PLANNING DIVISION (909) 797-2489 EXT. 224	
1. This Special Use Permit is for the Architectural Review of an 800 square foot (16'x50'), 17-foot tall steel carport proposed to be constructed in the rear of the property located at 37533 Oak Mesa Drive; APN: 0322-841-18. Any alteration or expansion of these facilities, or increase in the developed area of the site from that shown on the approved site plan, may require the submission of a new application or an additional application for Revisions for review and approval.	
2. The applicant shall defend, indemnify, and hold harmless the City, its agents, officers, and employees from any claim, action or proceeding attacking or seeking to set aside, void or annul the approval of all or part of the matters applied for, or any other claim, action or proceeding relating to or arising out of such approval. This obligation includes the obligation to reimburse the City, its agents, officers and employees for any court costs or attorney fees which the City, its agents, officers, or employees are required by a court to pay as a result of such claim, action or proceeding. The City agrees to notify the applicant of any such claim, action or proceeding promptly after the City becomes aware of it. The City may participate in the defense of the claim, action or proceeding, but such participation will not relieve the applicant of applicant's defense and indemnification obligations, including City expenses.	
3. This Special Use Permit shall become null and void if all conditions have not been complied with and the occupancy or use of the land has not taken place within three (3) years of the date of approval. One extension of time, not to exceed three (3) years, may be granted upon written request and submittal of the appropriate fee not less than 30 days prior to the date of expiration. **PLEASE NOTE:** this will be the only notice given for the above specified expiration date. **The applicant is responsible for the initiation of an extension request.**	
4. A Categorical Exemption is being issued for this project, pursuant to the California Environmental Quality Act of 1970 and the CEQA Guidelines, as amended. The applicant/owner shall deliver a $50.00 administrative handling fee to the Planning Division within five (5) days after the effective date of conditional approval. **Payments shall be made with a Check, Money Order or Cashier's Check for $50.00 made payable to the "Clerk of the Board".** The Planning Division shall then file the Notice of Exemption with	

DRAFT

the Clerk. Proof of fee payment will be required prior to issuance of building permit.	
5. All conditions of this Special Use Permit are continuing conditions. Failure of the applicant and/or operator to comply with any or all of said conditions at any time may result in the revocation of the permit granted to use the property.	
6. Commercial uses within the Single Residential Land Use Districts are strictly prohibited. The detached accessory structure shall not be used for commercial purposes.	
FIRE DEPARTMENT (909) 797-2489 EXT. 246	
7. This project is protected by the Yucaipa Fire Department / CalFire. Prior to any construction occurring on any parcel, the applicant shall contact the Fire Marshall for verification of current fire protection development requirements. All new construction shall comply with the adopted California Fire Code and all applicable statutes, codes, ordinances, standards and policies of the Yucaipa Fire Department/CalFire.	
8. This project is in a Fire Safety Review Area 1. This is a high fire hazard brush area. This project shall comply with the construction and development standards for a FR-1 Area. Contact the City Building & Safety Division for FR-1 Area construction and development standards.	
9. Fire Department access roads and/or public/private streets shall meet the Fire Department minimum width standard of twenty-four (24) feet. Within FR-1 zone minimum width shall be twenty-six (26) feet. Access roads shall be paved (asphalt/concrete) and in place prior to placement of combustible material on site. Fire Department minimum paving thickness shall be no less than four (4) inches. This standard shall not lessen other agency requirements.	
10. Fire Department access roads and/or public/private streets and residential driveways shall have a minimum vertical clearance of thirteen (13) feet and six (6) inches.	
11. Fire Department access roadways and/or public/private streets and driveways shall not exceed 12% grade (please note: Engineering Division requirements may be more restrictive).	
12. Required fire flow for this project, as determined by California Fire Code Appendix 'B', is as follows: GPM = 1,500 at 20 psi residual; for minimum 2 hour duration A reduction in the required fire flow rate may be allowed per the exceptions specified in the California Fire Code. System shall be looped with minimum eight (8) inch mains; six (6) inch laterals; six (6) inch risers; six (6) inch diameter hydrants with one 2 ½" outlet and one 4" outlet.	

13. Approved fire hydrants capable of supplying required fire flow shall be provided to all premises upon which facilities, buildings or portions of buildings are constructed or moved within the jurisdiction. When any portion of the facility or building protected is in excess of 400 feet from a fire hydrant on a public street, as measured by an approved route around the exterior of the facility or building, additional fire hydrants meeting the required fire flow shall be provided.	
14. Fire hydrants shall be installed at locations to be determined by the California Fire Code (2022) Appendix "C". Required fire flow to be determined by the California Fire Code (2022) Appendix "B". Minimum fire flow shall not be less than 1500 gpm.	
THE FOLLOWING CONDITIONS SHALL BE MET PRIOR TO ISSUANCE OF A BUILDING PERMIT:	
FIRE DEPARTMENT (909) 797-2489 EXT. 246	
15. A fuel break of one hundred (100) feet (brush and weed clearance) is required prior to construction. The clearance shall be maintained on a year-round basis.	
16. An additional fuel modification zone of 100 feet shall be provided on all side(s) of the proposed structure(s). Fuels in this zone are to be thinned and/or removed or otherwise modified to provide a reasonable level of fire defense protection to the proposed structure(s).	
17. Fire hydrants shall be installed and operational as per approved water system delivery plans prior to any framing, construction, or delivery of combustible materials to project site.	
18. An alternative type of construction providing a higher level of fire resistance is required. Contact the City Building Department for more information.	
PLANNING DIVISION (909) 797-2489 EXT. 224	
19. Proof of fee payment of Fish and Game fees and/or County Administrative handling fees pursuant to California State Assembly Bill 3158 shall be submitted.	
20. Provide detailed building elevations including materials, finishes, colors, and signage for all buildings for Planning Division review and approval prior to issuance of building permits. Building elevations shall be consistent with those approved by the Planning Commission.	
BUILDING AND SAFETY DIVISION (909) 797-2489 EXT. 263	
21. This project will require one or more building permits. Permits will require a complete permit application and complete building plans to be submitted for approval prior to commencement of work.	
22. A complete set of detailed construction plans designed and stamped by a licensed California Engineer is required.	

23. Metal structures require that the foundation and site plans be designed for local conditions by a Licensed California Engineer. This shall be submitted as part of the complete plan set for review.	
24. Separate submittals and permits are required for all structures, accessory structures such as, but not limited to, trash enclosures, patios, trellises, gazebos block walls, signage, and storage buildings.	
25. Pursuant to California Business and Professions Code Section 6737, this project is required to be designed by a California licensed architect or engineer.	
SUBJECT PROPERTY SHALL NOT BE OCCUPIED AND/OR USED FOR PURPOSES APPLIED FOR UNTIL THE FOLLOWING CONDITIONS HAVE BEEN MET:	
FIRE DEPARTMENT (909) 797-2489 EXT. 246	
26. Residential driveways shall be paved (asphalt/concrete) and shall have a minimum width of twelve (12) feet. Driveways of this standard shall serve no more than two single family dwellings and shall not exceed 12% in grade.	
27. Driveways exceeding 150 feet shall have a Fire Department approved turn-around at the terminus (hammer-head tee).	
28. Fire Department access roadways and/or public/private streets and driveways shall extend to within one hundred fifty (150) feet of and shall give reasonable access to all portions of the exterior walls of the first story of any building. An access road, approved by the Fire Department, shall be provided to within fifty (50) feet of all structures when the natural grade between access road and structure is in excess of 30%. Where an approved access road cannot be provided, a fire protection system shall be required and approved by the Fire Department.	
29. Manual operated gates across Fire Department access roadways, public and/or private streets and driveways, shall be equipped with approved emergency key-operated ("Knox" type) locks. For automatic gates, a "Knox" keyed emergency access switch shall be installed at location determined by Fire Department, and shall over-ride all command functions and open gate automatically upon activation. All automatic gates shall have a manual over-ride for use during loss of electric power. "Knox box" request forms are available from the Fire Department.	
30. Address numbers shall be placed on all new and existing residential structures in such a manner as to be plainly visible and legible from the access roadway or street. Single family dwellings shall have numbers of 4" height, 3/8" stroke on contrasting background. Address numbers shall be low voltage, automatically electrically illuminated. Where structure setback exceeds one hundred (100) feet from the access roadway or street, additional	

non-illuminated numbers 4” in height, 3/8” stroke, on contrasting background shall be displayed at property access entrance.	
31. Approved fire hydrant pavement markers shall be installed.	
32. Residential automatic fire sprinklers may be required to be installed according to NFPA 13D, or Section R313 of the California Residential Code, and Fire Department requirements **depending on fire hydrant location and fire flow test (flow test from water department must be submitted)**. Submit three (3) sets of shop plans with material cut sheets and hydraulic calculations for Fire Department review and approval prior to an installation. Submit copy of California C-16 license. Minimum water meter supplying a 13D system shall be 1” steel pipe, or ¾" if other than steel pipe. Minimum pipe size for interior use shall be 1” steel pipe, or ¾” if other than steel pipe (actual pipe size to be hydraulically calculated). Residential sprinkler heads of proper temperature rating shall be installed in attic and built-up storage spaces where mechanical equipment (fau, water heater, etc.) is installed.	
33. Smoke detectors, hard wired with battery back-up, shall be installed in all sleeping areas and in all hallways leading to sleeping areas. Smoke detectors shall be installed at the top of all stairways.	
34. Carbon Monoxide detectors shall be installed pursuant to manufacturer specifications.	
35. For each chimney used in conjunction with any fireplace or heating appliance in which solid or liquid fuel is used, an approved spark arrester shall be installed and visible from the ground. Spark arrester shall be of stainless steel, copper or brass, woven galvanized wire mesh, twelve (12) gauge, and minimum of 3/8” to ½” maximum openings. (existing residence)	
36. A class “A” roof covering structure with “bird stops” shall be installed.	
37. High Fire Hazard Areas FR-1 & FR-2: one-hour fire resistive construction is required for exterior walls. Contact Building and Safety / Fire Prevention for more information.	
38. The main electrical panel and all sub-panels shall be labeled on inside cover for all circuits.	
39. Water heater (fuel fired) shall be properly vented to exterior of structure. Water heater shall be seismic strapped to wall and be located 18” above a garage floor.	
PLANNING DIVISION (909) 797-2489 EXT. 224	
40. Any lights used to illuminate the site shall be hooded and designed so as to reflect away from adjoining properties and public thoroughfares.	

41. The proposed structure shall be painted to match the colors of the residence per the approved color palette.	
42. The proposed structure shall be constructed to minimize its location and appearance from the street.	

MIKE MCCUTCHEON
37533 OAK MESA YUCAIPA
909 768 2456
YUCAIPA VALLEY WATER DIST
909 797 5117
12770 2ND YUCAIPA
SEWAGE IS SEPTIC TANK
SOCAL EDISON
800 655 4555
298 KANSAS ST REDLANDS
SOCAL GAS
877 238 0092
1981 W LUGONIA REDLANDS
TELEPHONE NONE
CABLE TV NONE
.51 ACRES
APN 0322-841-18
PROJECT GARAGE FOR HUSBAND
NO EASEMENTS

NO DRAINAGE CHANNELS
NO GRADING FLAT LAND
CUSTOM HOME OVERLAY
RS-20M
ADJACENT CH, RS-20M

PROPOSED METAL GARAGE
EXISTING HOME AND SHE SHED
11000/22298=.50
.50 X 100 = 50% LOT COVERAGE
NO PROTECTED OR NATIVE TREES
60' TO FIRE HYDRANT

ADJACENT HOUSE
MORE THAN 30' AWAY

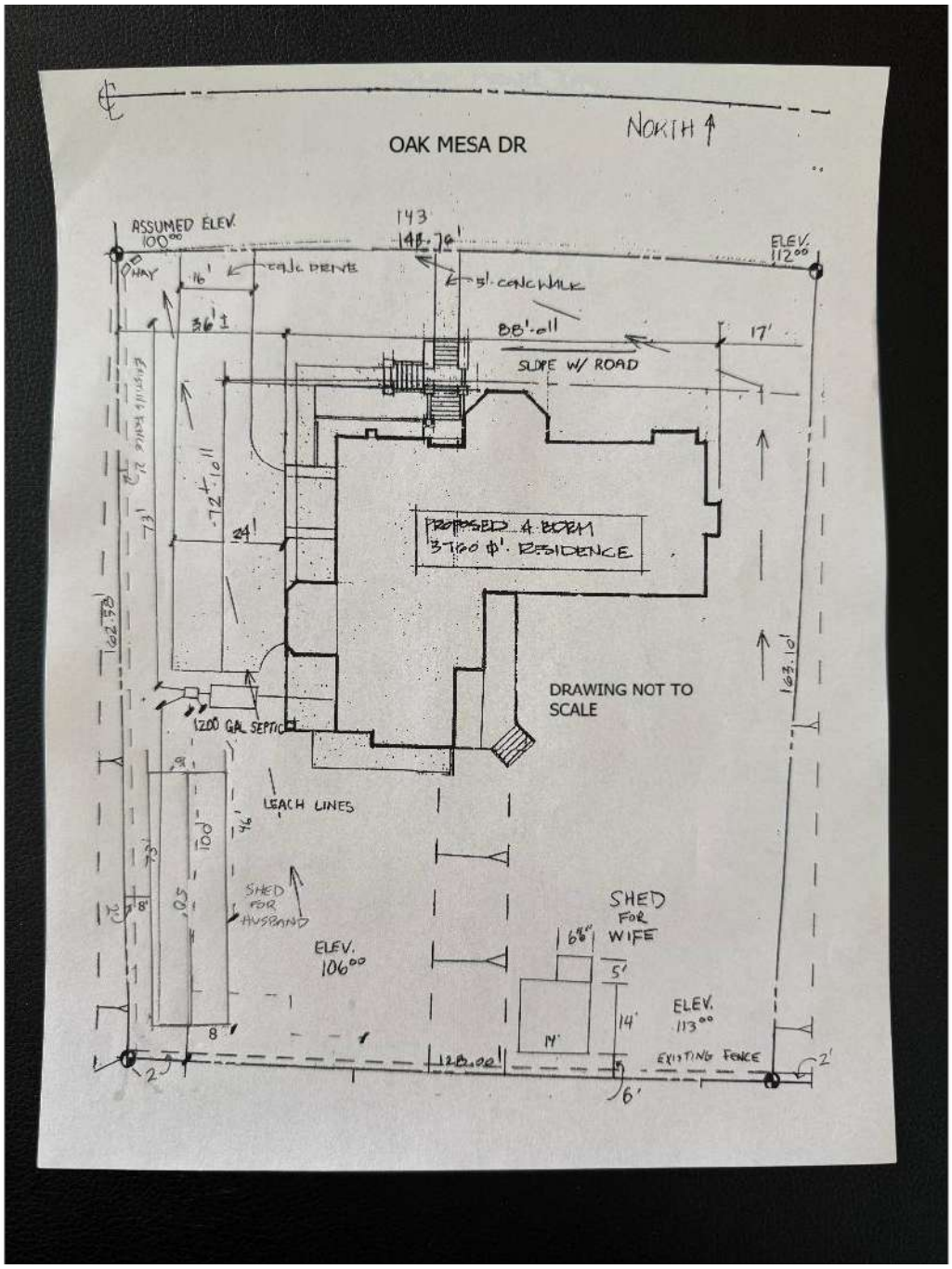

EXISTING HOUSE

RS-20M

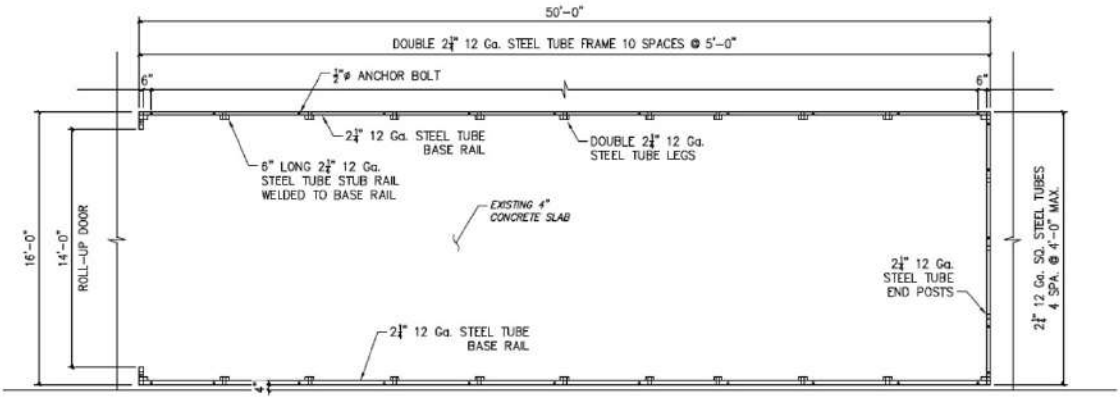

FLOOR PLAN

SCALE: NTS

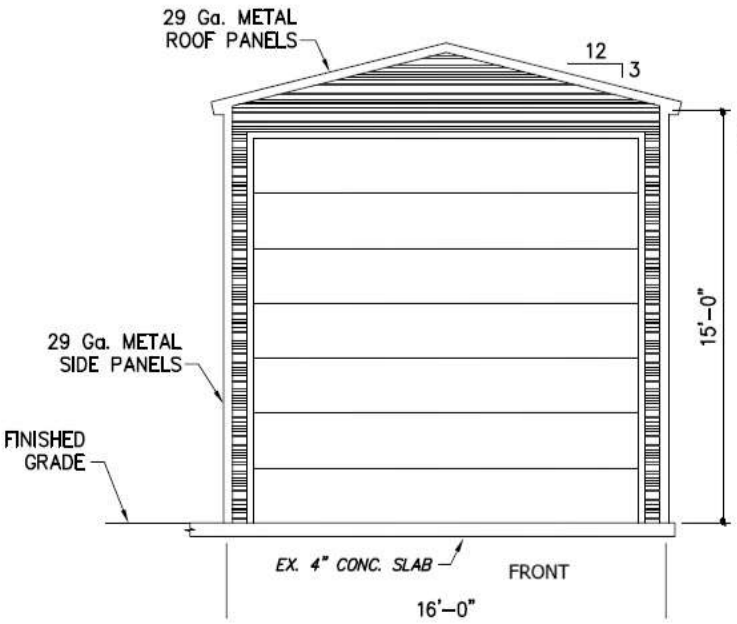

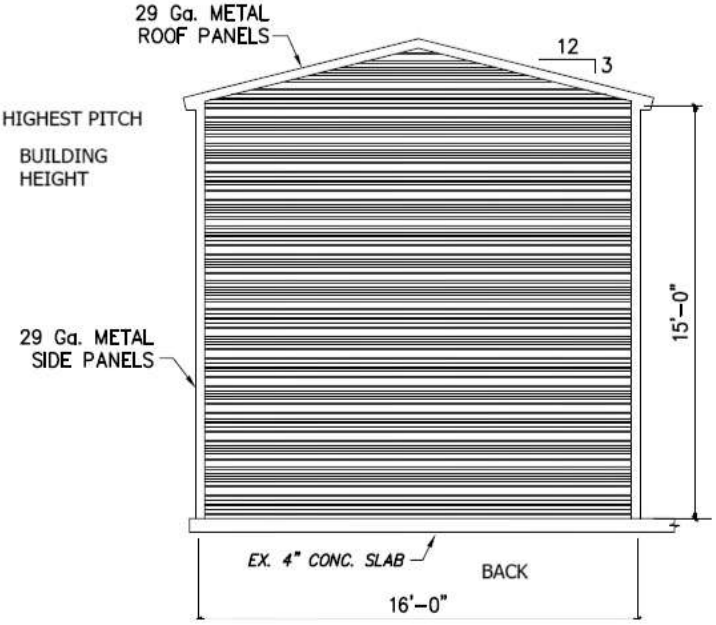

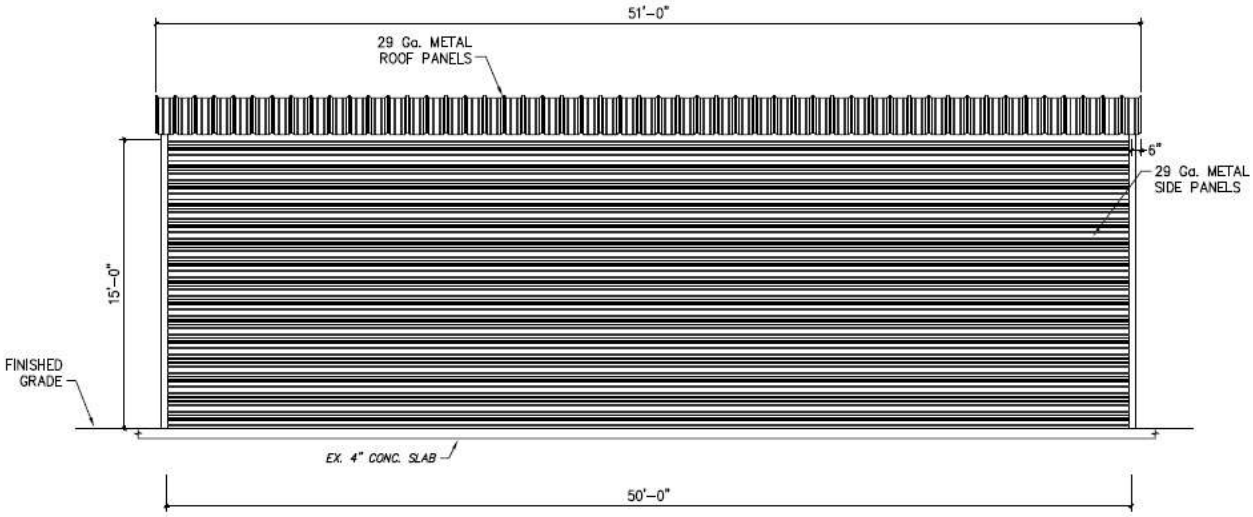

SIDE ELEVATION

WEST

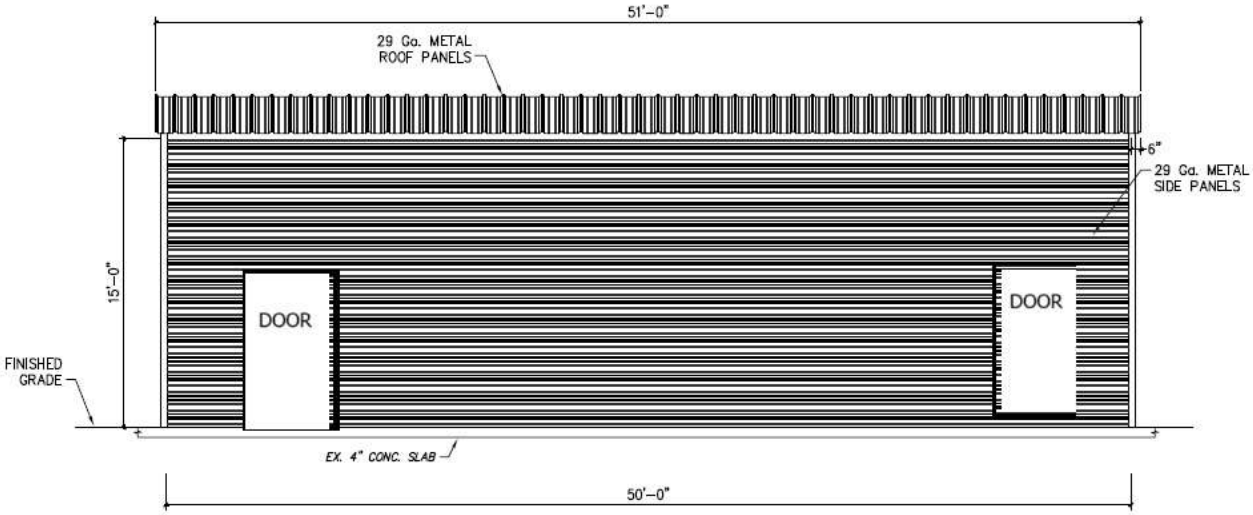

SIDE ELEVATION

EAST

All Products

Panels

- 7.2 panel
- 7/8 panel 29G & 26G
- U panel
- PBR panel
- L5 panel
- B-Deck Panel

Spanish Tile Panels

- Spanish Panel

Polycarbonate Panels

- L5 Profile
- PBR Profile

Tubing

Structural

Trim

WALL COLOR

Click and Drag to Change View, CTRL-SCROLL WHEEL to Zoom, ENTER to Pause/Resume

Available Backgrounds

None | Grass Field | Concrete Field

Available Color's

Burgundy | Red Shingle

Black | Dark Stone

Light Rock | Spanish 29g

ROOF COLOR

All Products

Panels

- 7.2 panel
- 7/8 panel 29G & 26G
- U panel
- PBR panel
- L5 panel
- B-Deck Panel

Spanish Tile Panels

- Spanish Panel

Polycarbonate Panels

- L5 Profile
- PBR Profile

Tubing

Structural

Trim

Click and Drag to Change View. CTRL-SCROLLWHEEL to Zoom. ENTER to Pause/Resume Rotation.

Available Backgrounds

None | Grass Field | Concrete Field

Available Color's

Terra Cotta | Copper Penny

Country Red | Cardinal Red

Cocoa Brown | Rustic

Sea Wolf | Ash Gray

Oak Mesa Dr
Oak Mesa Dr
Oak Mesa Dr
Oak Mesa Dr
Oak Mesa Dr
Oak Mesa Dr
Mesa Sol Dr
Mesa Sol Dr
13609
37545
Layers
Google
Imagery ©2025 Airbus, Map data ©2025
United States
3D Earth view is not available
Terms
Privacy
Send Product Feedback
20 ft